Axial piston variable pump
A10VSO Series 31

RE 92711
Edition: 10.2016
Replaces: 01.2012

- All-purpose medium pressure pump
- Sizes 18 to 140
- Nominal pressure 280 bar
- Maximum pressure 350 bar
- Open circuit

Features

- Variable pump with axial piston rotary group in swash-plate design for hydrostatic drives in open circuit.
- The flow is proportional to the drive speed and displacement.
- The flow can be infinitely varied by adjusting the swash-plate angle.
- 2 drain ports
- Excellent suction performance
- Low noise level
- Long service life
- Favorable power/weight ratio
- Versatile controller range
- Short control time
- The through drive is suitable for adding gear pumps and axial piston pumps up to the same size, i.e., 100% through drive.
- Suitable for operation with mineral oil and HF hydraulic fluids

Contents

Type code	2
Hydraulic fluids	4
Working pressure range	6
Technical data, standard unit	7
Technical data, high-speed version	8
Technical data, HF hydraulic fluids	8
DG – Two-point control, direct operated	10
DR – Pressure controller	11
DRG – Pressure controller, remote controlled	12
DFR/DFR1 – Pressure flow controller	13
DFLR – Pressure, flow and power control	15
ED – Electrohydraulic pressure control	16
ER – Electrohydraulic pressure control	17
Dimensions, size 18 up to 140	18
Dimensions, through drive	36
Overview of mounting options	42
Combination pumps A10VSO + A10VSO	43
Connector for solenoids	44
Installation instructions	45
Project planning notes	48
Safety instructions	48

Type code

01	02	03	04	05		06	07		08	09	10	11	12	13
	A10VS	**O**			**/**	**31**		**–**	**V**					

Version

		18	28	45	71	88	100	140	
01	Standard version (without code)	●	●	●	●	●	●	●	
	HFA, HFB, HFC hydraulic fluid (except for Skydrol)	●	●	●	●	●	●	●	**E**
	High-speed version (external dimensions are not affected by this option).	–	–	●	●	–	●	●	**H**

Axial piston unit

02	Swashplate design, variable, nominal pressure 280 bar, maximum pressure 350 bar	●	●	●	●	●	●	●	**A10VS**

Operating mode

03	Pump, open circuit	**O**

Size (NG)

04	Geometric displacement, (see table of values on pages 6 and 7)	**18**	**28**	**45**	**71**	**88**	**100**	**140**	

Control device

05	Two-point control, direct operated				●	●	●	●	●	●	●	**DG**
	Pressure controller	hydraulic			●	●	●	●	●	●	●	**DR**
	with flow controller	hydraulic	X-T open		●	●	●	●	●	●	●	**DFR**
			X-T plugged with flushing function		●	●	●	●	●	●	●	**DFR1**
	with pressure cut-off	hydraulic	remote controlled		●	●	●	●	●	●	●	**DRG**
		electrical	negative control	*U* = 12 V	●	●	●	●	●	●	●	**ED71**
				U = 24 V	●	●	●	●	●	●	●	**ED72**
		electrical	positive control	*U* = 12 V	●	●	●	●	●	●	●	**ER71**
				U = 24 V	●	●	●	●	●	●	●	**ER72**
	Pressure,flow and power controller				–	●	●	●	●	●	●	**DFLR**

Series

06	Series 3, index 1	**31**

Direction of rotation

07	Viewed on drive shaft	clockwise	**R**
		counter-clockwise	**L**

Sealing material

08	FKM (fluoroelastomer)	**V**
	NBR (nitrile rubber) only if using HFA, HFB and HFC hydraulic fluids (position 01; order code “E”)	**P**

Drive shaft

09	Splined shaft ANSI B92.1a	standard shaft	●	●	●	●	●	●	●	**S**
		similar to shaft “S” however for higher input torque	●	●	●	●	●	–	–	**R**
	Parallel keyed shaft DIN 6885	permissible through-drive torque (see page 9)	●	●	●	●	●	●	●	**P**

Mounting flange

			18	28	45	71	88	100	140	
10	ISO 3019-2	2-hole	●	●	●	●	●	●	–	**A**
		4-hole	–	–	–	–	–	–	●	**B**

Working port

11	SAE flange port fastening thread, metric	at side, opposite	●	●	●	–	–	●	●	**12**
			–	–	–	●	●	–	–	**42**

01	02	03	04	05		06	07		08	09	10	11	12	13
	A10VS	**O**			**/**	**31**		**–**	**V**					

Through drive (for mounting options, see page 42)

12	Flange ISO 3019-1 Diameter	Hub for splined shaft[1)] Diameter		**18**	**28**	**45**	**71**	**88**	**100**	**140**	
	without through drive			●	●	●	●	●	●	●	**N00**
	82-2 (A)	5/8 in	9T 16/32DP	●	●	●	●	●	●	●	**K01**
		3/4 in	11T 16/32DP	●	●	●	●	●	●	●	**K52**
	101-2 (B)	7/8 in	13T 16/32DP	–	●	●	●	●	●	●	**K68**
		1 in	15T 16/32DP	–	–	●	●	●	●	●	**K04**
	127-2 (C)	1 1/4 in	14T 12/24DP	–	–	–	●	●	●	●	**K07**
		1 1/2 in	17T 12/24DP	–	–	–	–	–	●	●	**K24**
	152-4 (D)	1 3/4 in	13T 8/16DP	–	–	–	–	–	–	●	**K17**
	Ø63, metric 4-hole	Shaft key Ø 25		–	●	●	●	●	●	●	**K57**
	Flange ISO 3019-2 Diameter										
	80, 2-hole	3/4 in	11T 16/32DP	●	●	●	●	●	●	●	**KB2**
	100, 2-hole	7/8 in	13T 16/32DP	–	●	●	●	●	●	●	**KB3**
		1 in	15T 16/32DP	–	–	●	●	●	●	●	**KB4**
	125, 2-hole	1 1/4 in	14T 12/24DP	–	–	–	●	●	●	●	**KB5**
		1 1/2 in	17T 12/24DP	–	–	–	–	–	●	●	**KB6**
	180, 4-hole	1 3/4 in	13T 8/16DP	–	–	–	–	–	–	●	**KB7**

Connectors for solenoids[2)]

13									
	Without connector (without solenoid, with hydraulic control only, without code)	●	●	●	●	●	●	●	
	HIRSCHMANN connector – without suppressor diode	●	●	●	●	●	●	●	**H**

● = Available ○ = On request – = Not available

Notice

- ▶ Note the project planning notes on page 48.
- ▶ In addition to the type code, please specify the relevant technical data when placing your order.

1) Hub for splined shaft according to ANSI B92.1a
2) Connectors for other electric components can deviate.

Hydraulic fluids

The A10VSO variable pump is designed for operation with HLP mineral oil according to DIN 51524. Application instructions and requirements for hydraulic fluids should be taken from the following data sheets before the start project planning:

- 90220: Hydraulic fluids based on mineral oils and related hydrocarbons
- 90221: Environmentally acceptable hydraulic fluids
- 90222: Fire-resistant, water-free hydraulic fluids (HFDR/HFDU) (for permissible technical data, see data sheet 90255)
- 90223: Fire-resistant, water-containing hydraulic fluids (HFAE, HFAS, HFB, HFC)
- 90225: Restricted technical data only for operation
- with fire-resistant, water-free and water-containing hydraulic fluids (HFDR, HFDU, HFB, HFC)- technical data

Notes on selection of hydraulic fluid

The hydraulic fluid should be selected so that the operating viscosity in the operating temperature range is within the optimum range (ν_{opt} see selection diagram).

Notice

- The axial piston unit is suitable for operation with water-containing HF hydraulic fluid. See version “E”

Viscosity and temperature of hydraulic fluids

	Viscosity	Shaft seal	Temperature[3]	Comment
Cold start	ν_{max} ≤ 1600 mm²/s	NBR[2]	θ_{St} ≥ −40 °C	t ≤ 3 min, without load (p ≤ 50 bar), n ≤ 1000 min⁻¹ Permissible temperature difference between axial piston unit and hydraulic fluid in the system maximum 25 K
		FKM	θ_{St} ≥ -25 °C	
Warm-up phase	ν = 1600 ... 400 mm²/s			t ≤ 15 min, p ≤ 0.7 × p_{nom} and n ≤ 0.5 × n_{nom}
Continuous operation	ν = 400 ... 10 mm²/s[1]	NBR[2]	θ = +85 °C	measured at port **L, L₁**
		FKM	θ = +110 °C	
	ν_{opt} = 36 ... 16 mm²/s			Range of optimum operating viscosity and efficiency
Short-term operation	ν_{min} = 10 ... 7 mm²/s	NBR[2]	θ = +85 °C	t ≤ 3 min, p ≤ 0.3 × p_{nom} , measured at port **L, L₁**
		FKM	θ = +110 °C	

▼ **Selection diagram**

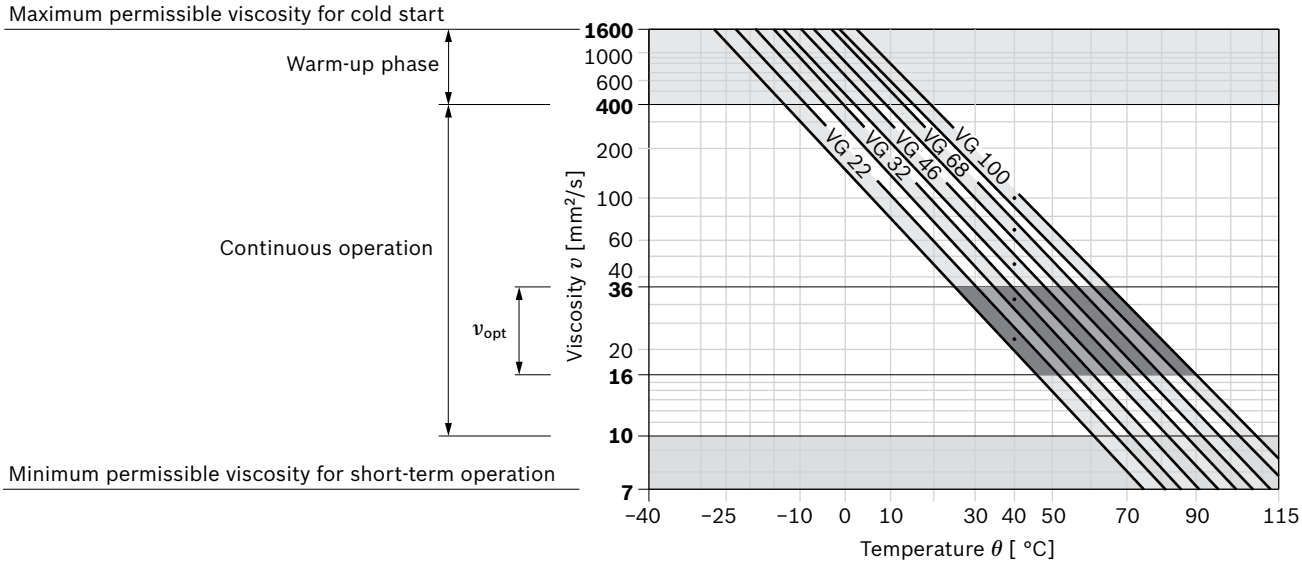

1) Corresponds e.g. for VG 46 to a temperature range of +4 °C to +85 °C (see selection diagram)
2) Version EA10VSO...-P (if operating with HFA, HFB and HFC hydraulic fluids
3) If the temperature at extreme operating parameters cannot be adhered to, please contact us.

Filtration of the hydraulic fluid

Finer filtration improves the cleanliness level of the hydraulic fluid, which increases the service life of the axial piston unit. A cleanliness level of at least 20/18/15 is to be maintained according to ISO 4406.

At very high hydraulic fluid temperatures (maximum 110 °C, measured at port **L, L_1**), at least a cleanliness level of 19/17/14 according to ISO 4406 is necessary.

Please contact us if the above classes cannot be observed.

Working pressure range

Pressure at working port B		**Definition**
Nominal pressure p_{nom}	280 bar	The nominal pressure corresponds to the maximum design pressure.
Maximum pressure p_{max}	350 bar	The maximum pressure corresponds to the maximum working pressure within the single operating period. The sum of the single operating periods must not exceed the total operating period.
Single operating period	2 ms	
Total operating period	300 h	
Minimum pressure $p_{B\ abs}$ (high-pressure side)	10 bar[1)]	Minimum pressure on the high-pressure side (**B**) which is required in order to prevent damage to the axial piston unit.
Rate of pressure change $R_{A\ max}$	16000 bar/s	Maximum permissible speed of pressure build-up and reduction during a pressure change across the entire pressure range.
Pressure at suction port S (inlet)		
Minimum pressure $p_{S\ min}$ Standard	0.8 bar absolute	Minimum pressure at suction port **S** (inlet) that is required in order to avoid damage to the axial piston unit. The minimum pressure depends on the rotational speed and displacement of the axial piston unit.
Maximum pressure $p_{S\ max}$	10 bar	
Case pressure at port L, L_1		
Maximum pressure $p_{L\ max}$	2 bar[1)] absolute	Maximum 0.5 bar higher than inlet pressure at port **S**, but not higher than $p_{L\ max}$. A case drain line to the reservoir is required.

▼ **Rate of pressure change $R_{A\ max}$**

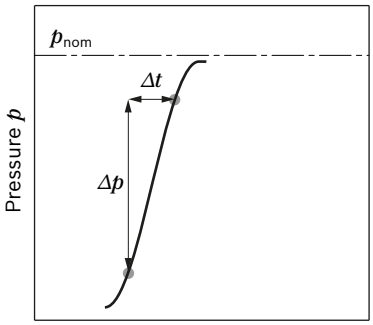

▼ **Pressure definition**

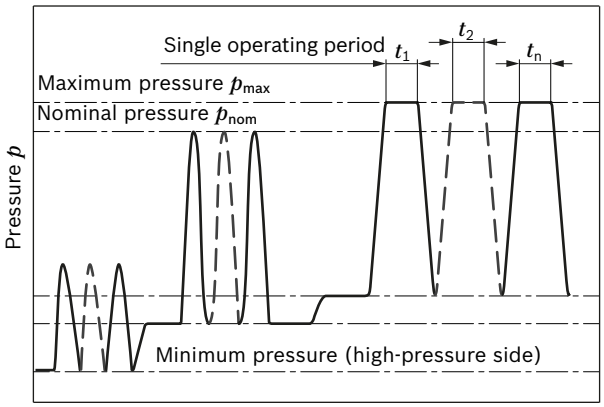

Total operating period = $t_1 + t_2 + ... + t_n$

1) Other values on request

Notice
Working pressure range valid when using hydraulic fluids based on mineral oils. Please contact us for values for other hydraulic fluids.

Minimum permissible inlet pressure at suction port S with speed increase

In order to avoid damage to the pump (cavitation), a minimum inlet pressure must be guaranteed at suction port **S**. The minimum inlet pressure level depends on the rotational speed and the displacement of the variable pump.

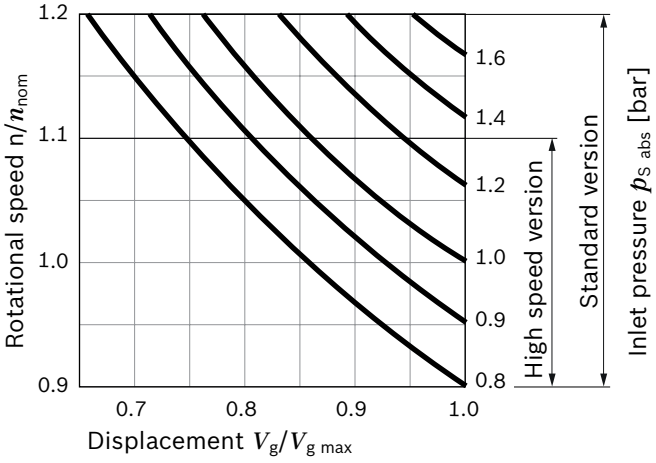

During continuous operation in overspeed over n_{nom}, a reduction in operational service life is to be expected due to cavitation erosion.

Technical data, standard unit

Size		NG		18	28	45	71	88	100	140
Displacement, geometric, per revolution		$V_{g\,max}$	cm³	18	28	45	71	88	100	140
Rotational speed maximum[1]	at $V_{g\,max}$	n_{nom}	rpm	3300	3000	2600	2200	2100	2000	1800
	at $V_g < V_{g\,max}$[2]	$n_{max\,perm}$	rpm	3900	3600	3100	2600	2500	2400	2100
Flow	at n_{nom} and $V_{g\,max}$	$q_{v\,max}$	l/min	59	84	117	156	185	200	252
	at n_E= 1500 rpm and $V_{g\,max}$	$q_{vE\,max}$	l/min	27	42	68	107	132	150	210
Power	at n_{nom}, $V_{g\,max}$	P_{max}	kW	28	39	55	73	86	93	118
at Δp = 280 bar	at n_E= 1500 rpm and $V_{g\,max}$	$P_{E\,max}$	kW	12.6	20	32	50	62	70	98
Torque	Δp = 280 bar	T_{max}	Nm	80	125	200	316	392	445	623
at $V_{g\,max}$ and	Δp = 100 bar	T	Nm	30	45	72	113	140	159	223
Rotary stiffness of drive shaft	S	c	Nm/rad	11087	22317	37500	71884	71884	121142	169437
	R	c	Nm/rad	14850	26360	41025	76545	76545	–	–
	P	c	Nm/rad	13158	25656	41232	80627	80627	132335	188406
Moment of inertia for rotary group		J_{TW}	kgm²	0.00093	0.0017	0.0033	0.0083	0.0083	0.0167	0.0242
Case volume		V	l	0.4	0.7	1.0	1.6	1.6	2.2	3.0
Weight **without** through drive (approx.)		m	kg	12.9	18	23.5	35.2	35.2	49.5	65.4
Weight **with** through drive (approx.)				14	19.3	25.1	38	38	55.4	74.4

Determining the characteristics		
Flow	$q_v = \frac{V_g \times n \times \eta_v}{1000}$	[l/min]
Torque	$T = \frac{V_g \times \Delta p}{20 \times \pi \times \eta_{mh}}$	[Nm]
Power	$P = \frac{2\,\pi \times T \times n}{60000} = \frac{q_v \times \Delta p}{600 \times \eta_t}$	[kW]

Key

V_g Displacement per revolution [cm³]

Δp Differential pressure [bar]

n Rotational speed [rpm]

η_v Volumetric efficiency

η_{hm} Hydraulic-mechanical efficiency

η_t Total efficiency ($\eta_t = \eta_v \times \eta_{hm}$)

Notice

- Theoretical values, without efficiency and tolerances; values rounded
- Operation above the maximum values or below the minimum values may result in a loss of function, a reduced service life or in the destruction of the axial piston unit. Bosch Rexroth recommends checking the load by means of test or calculation / simulation and comparison with the permissible values.

1) The values are applicable:
– For the optimum viscosity range from ν_{opt} = 36 to 16 mm²/s
– For hydraulic fluid based on mineral oils
– For absolute pressure p_{abs} = 1 bar at suction port **S**

2) For a speed increase up to $n_{max\,perm}$, please observe the diagram on page 6.

Technical data, high-speed version (external dimensions are the same as the standard version)

Size		NG		45	71	100	140
Displacement, geometric, per revolution		$V_{g\,max}$	cm^3	45	71	100	140
Rotational speed maximum[1]	at $V_{g\,max}$	n_{nom}	rpm	3000	2550	2300	2050
	at $V_g < V_{g\,max}$[2]	$n_{max\,perm}$	rpm	3300	2800	2500	2200
Flow	at n_{nom} and $V_{g\,max}$	$q_{v\,max}$	l/min	135	178	230	287
Power	at n_{nom}, $V_{g\,max}$ and Δp = 280 bar	P_{max}	kW	63	83	107	134
Torque	Δp = 280 bar	T_{max}	Nm	200	316	445	623
at $V_{g\,max}$ and	Δp = 100 bar	T	Nm	72	113	159	223
Rotary stiffness drive shaft	S	c	Nm/rad	37500	71884	121142	169537
	R	c	Nm/rad	41025	76545	–	–
	P	c	Nm/rad	41232	80627	132335	188406
Moment of inertia for rotary group		J_{TW}	kgm^2	0.0033	0.0083	0.0167	0.0242
Case volume		V	l	1.0	1.6	2.2	3.0
Weight **without** through drive (approx.)		m	kg	23.5	35.2	49.5	65.4
Weight **with** through drive (approx.)				25.1	38	55.4	74.4

Notice

- Theoretical values, without efficiency and tolerances; values rounded
- Operation above the maximum values or below the minimum values may result in a loss of function, a reduced service life or in the destruction of the axial piston unit. Bosch Rexroth recommends checking the load by means of test or calculation / simulation and comparison with the permissible values.

Technical data, HF hydraulic fluids, maximum rotational speed

Hydraulic fluid[3] E-version	Size		NG		18	28	45	71	88	100	140
HFA	at nominal pressure p_N	140 bar	n_{nom}	rpm	2450	2250	1950	1650	1550	1500	1350
	at maximum pressure p_{max}	160 bar									
HFB	at nominal pressure p_N	140 bar	n_{nom}	rpm	2650	2400	2100	1760	1650	1600	1450
	at maximum pressure p_{max}	160 bar									
HFC	at nominal pressure p_N	175 bar	n_{nom}	rpm	2650	2400	2100	1760	1650	1600	1450
	at maximum pressure p_{max}	210 bar									
Technical data, HFD hydraulic fluids											
HFDR, HFDU polyalkylene glycol	at nominal pressure p_N	280 bar	n_{nom}	rpm	2650	2400	2100	1760	1650	1600	1450
HFDU polyol ester	at nominal pressure p_N	280 bar			3300	3000	2600	2200	2100	2000	1800

1) The values are applicable:
– At absolute pressure p_{abs} = 1 bar at suction port **S**
– For the optimal viscosity range of ν_{opt} = 36 to 16 mm^2/s
– For hydraulic fluid based on mineral oils

2) For a speed increase up to $n_{max\,perm}$, please observe the diagram on page 6.

3) For further information on HF hydraulic fluids, please see data sheets 90223 and 90225

Permissible radial and axial forces of the drive shafts

Size		NG		18	28	45	71	88	100	140
Maximum radial force at a/2	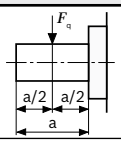	$F_{q\,max}$	N	350	1200	1500	1900	1900	2300	2800
Maximum axial force	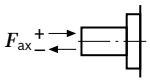	$\pm F_{ax\,max}$	N	700	1000	1500	2400	2400	4000	4800

Notice

- The values given are maximum values and do not apply to continuous operation. Drives with radial loading (pinion, V-belt drives) are not permissible!

Permissible input and through-drive torques

Size				18	28	45	71	88	100	140
Torque at $V_{g\,max}$ and Δp = 280 bar[1]		T_{max}	Nm	80	125	200	316	392	445	623
Maximum input torque at drive shaft[2]										
	S	$T_{E\,max}$	Nm	124	198	319	626	626	1104	1620
		Ø	in	3 /4	7 /8	1	1 1/4	1 1/4	1 1/2	1 3/4
	R	$T_{E\,max}$	Nm	160	250	400	644	644	–	–
		Ø	in	3 /4	7 /8	1	1 1/4	1 1/4	–	–
	P	$T_{E\,max}$	Nm	88	137	200	439	439	857	1206
		Ø	in	18	22	25	32	32	40	45
Maximum through-drive torque										
	S	$T_{D\,max}$	Nm	108	160	319	492	492	778	1266
	R	$T_{D\,max}$	Nm	120	176	365	548	548	–	–
	P	$T_{D\,max}$	Nm	88	137	200	439	439	778	1206

▼ **Distribution of torques**

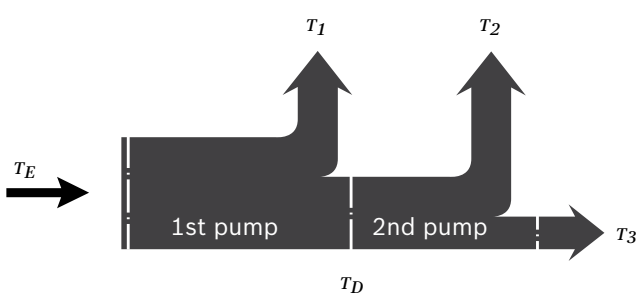

Torque at 1st pump	T_1		
Torque at 2nd pump	T_2		
Torque at 3rd pump	T_3		
Input torque	T_E	=	$T_1 + T_2 + T_3$
	T_E	<	$T_{E\,max}$
Through-drive torque	T_D	=	$T_2 + T_3$
	T_D	<	$T_{D\,max}$

1) Efficiency not considered
2) For drive shafts with no radial force

DG – Two-point control, direct operated

The variable pump can be set to a minimum swivel angle by connecting an external switching pressure to port **X.**
This will supply control fluid directly to the stroking piston; a minimum control pressure of p_{st} ≥ 50 bar is required.
The variable pump can only be switched between $V_{g\,max}$ or $V_{g\,min}$.
Please note that the required control pressure at port **X** is directly dependent on the actual working pressure p_B in port **B**. (See control pressure characteristic curve).
The maximum permissible switching pressure is 280 bar.

Switching pressure p_{st} in **X** = 0 bar ≙ $V_{g\,max}$
Switching pressure p_{st} in **X** ≥ 50 bar ≙ $V_{g\,min}$

▼ **Switching pressure characteristic curve**

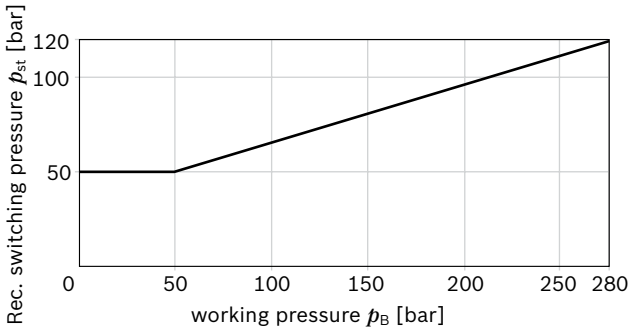

▼ **Circuit diagram**

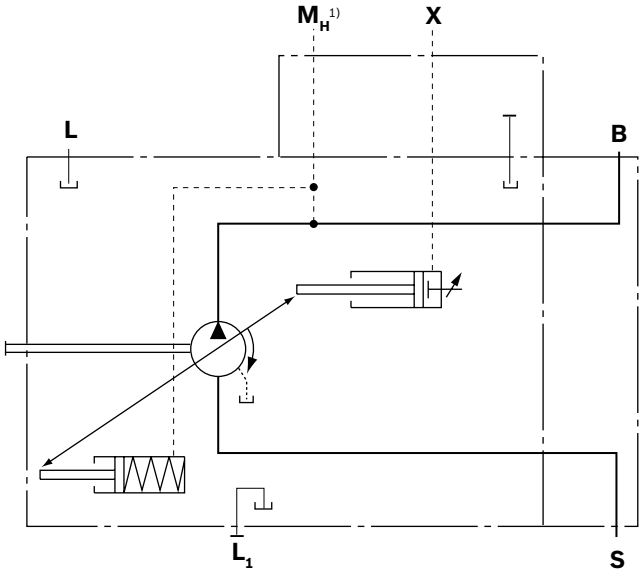

1) Only size 140

DR – Pressure controller

The pressure controller limits the maximum pressure at the pump outlet within the control range of the variable pump. The variable pump only supplies as much hydraulic fluid as is required by the consumers. If the working pressure exceeds the pressure command value at the pressure valve, the pump will regulate to a smaller displacement to reduce the control differential.

- Initial position in depressurized state: $V_{g\,max}$.
- Setting range[1)] for infinitely variable 20 to 280 bar pressure control. Standard is 280 bar.

▼ **Characteristic curve**

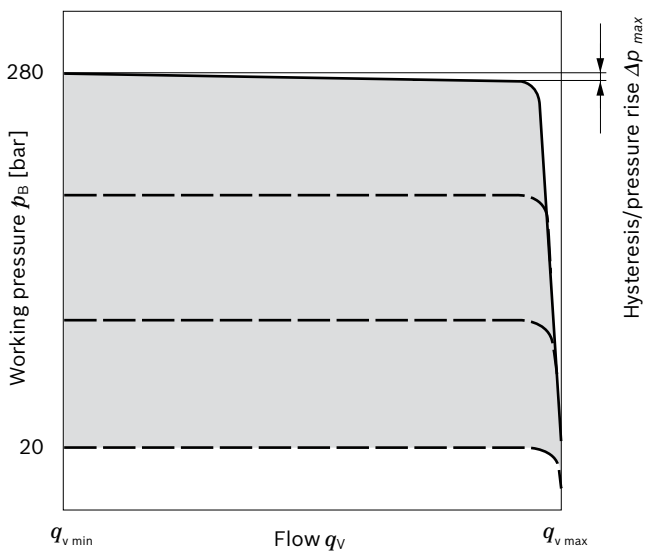

Characteristic curve valid at n_1 = 1500 rpm and θ_{fluid} = 50 °C.

▼ **Circuit diagram, sizes 18 to 100**

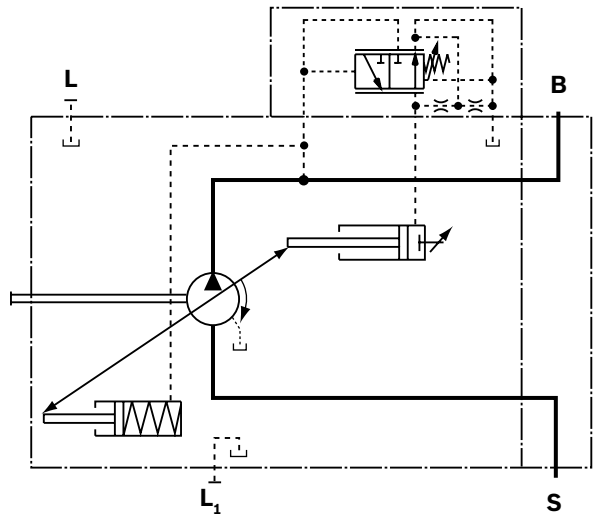

▼ **Circuit diagram, size 140**

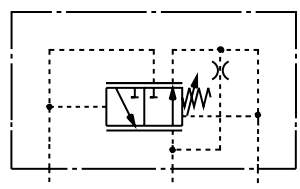

Controller data

NG		18	28	45	71	88	100	140
Pressure increase	Δp [bar]	4	4	6	8	9	10	12
Hysteresis and repeatability	Δp [bar]	maximum 3						
Pilot fluid consumption	[l/min]	maximum approx. 3						

1) In order to prevent damage to the pump and the system, the permissible setting range must not be exceeded. The range of possible settings at the valve is higher.

DRG – Pressure controller, remote controlled

For the remote controlled pressure controller, the LS pressure limitation is performed using a separately arranged pressure relief valve. Therefore any pressure control value under the pressure set on the pressure controller can be regulated. Pressure controller DR see page 11.
A pressure relief valve is externally piped up to port **X** for remote control. This relief valve is not included in the scope of delivery of the DRG control.
When there is differential pressure of 20 bar Δp (standard setting), the quantity of control fluid at the port is **X** approx. 1.5 l/min. If a different setting (range 10 to 22 bar) is required, please state in plain text.
As a separate pressure relief valve (**1**) we recommend:

- a direct operated, hydraulic or electric proportional one, suitable for the control fluid mentioned above.

The max. length of piping should not exceed 2 m.

- Basic position in depressurized state: $V_{g\,max}$.
- Setting range[1)] for pressure control 20 to 280 bar **(3).** Standard is 280 bar.
- Setting range for differential pressure 10 - 22 bar(**2**) Standard is 20 bar.

Unloading port **X** to the reservoir results in a zero stroke (standby) pressure which is approx. 1 to 2 bar higher than the defined differential pressure Δp, however system influences are not taken into account.

▼ **Characteristic curve DRG**

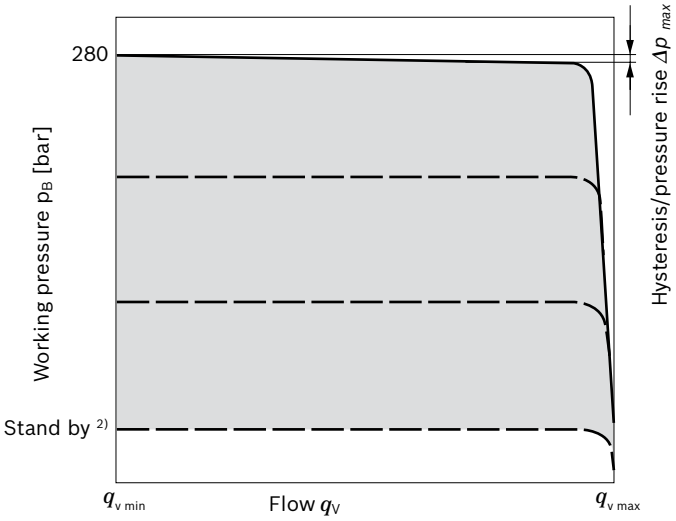

Characteristic curve valid for n_1 = 1500 rpm and t_{fluid} = 50 °C.

1) In order to prevent damage to the pump and the system, the permissible setting range must not be exceeded. The range of possible settings at the valve is higher.
2) Zero stroke pressure from pressure setting Δp on controller (**2**)

▼ **Circuit diagram DRG nominal size 18 to 100**

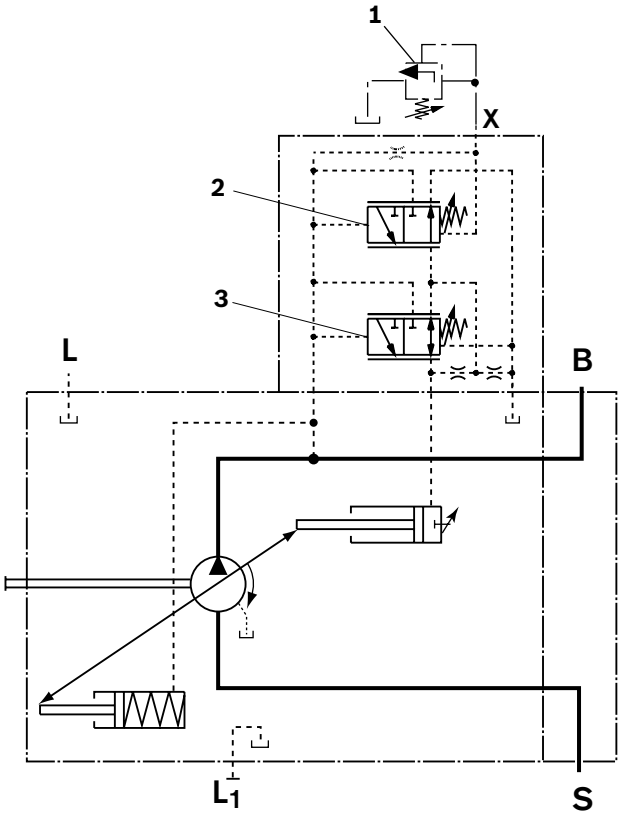

1 The separate pressure relief valve and the line are not included in the scope of delivery.
2 Remote controlled pressure cut-off (**G**).
3 Pressure controller (**DR**)

▼ **Circuit diagram, size 140**

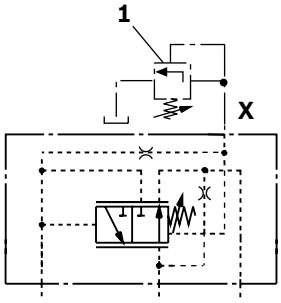

Controller data DRG

NG		18	28	45	71	88	100	140
Hysteresis and repeatability	Δp [bar]				maximum 4			
Pilot fluid consumption	[l/min]			maximum approx. 4.5				

DFR/DFR1 – Pressure flow controller

In addition to the pressure controller function (see page 11), a variable orifice (e.g. directional valve) is used to adjust the differential pressure upstream and downstream of the orifice. This is used to control the pump flow. The pump flow is equal to the actual hydraulic fluid quantity required by the consumer. With all controller combinations, the V_g reduction has priority.

- Basic position in depressurized state: $V_{g\,max}$.
- Setting range[1)] to 280 bar.
- For pressure controller data see page 11

Notice

- The DFR1 version has no unloading between **X** and the reservoir. Unloading the LS-pilot line must be possible in the valve system. Because of the flushing function of the flow controller in the DRS control valve, sufficient unloading of the **X**-line must also be provided.

▼ **Characteristic curve**

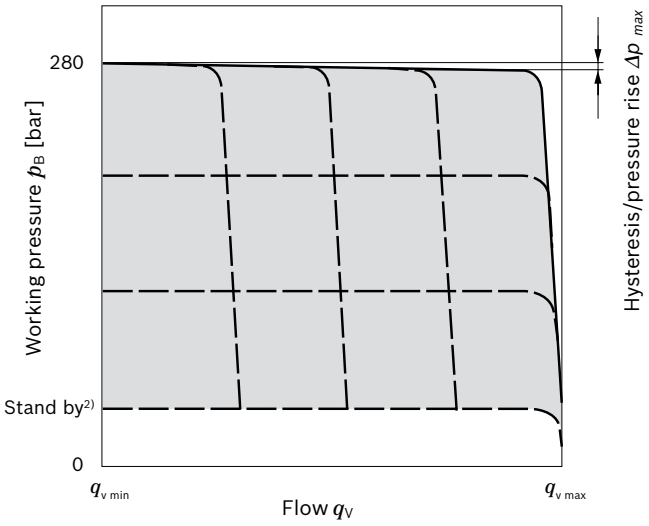

▼ **Characteristic curve at variable rotational speed**

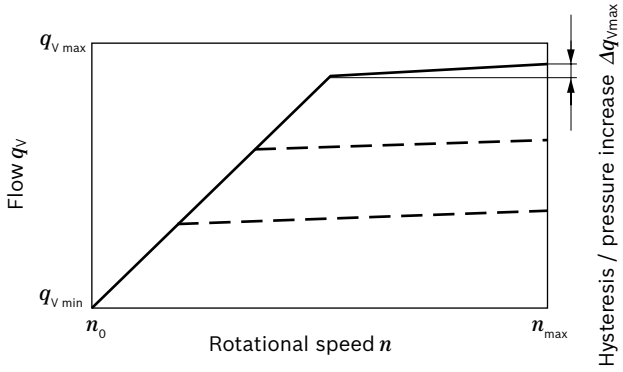

Characteristic curve valid at n_1 = 1500 rpm and θ_{fluid} = 50 °C.

▼ **Circuit diagram DFR size 18 to 100**

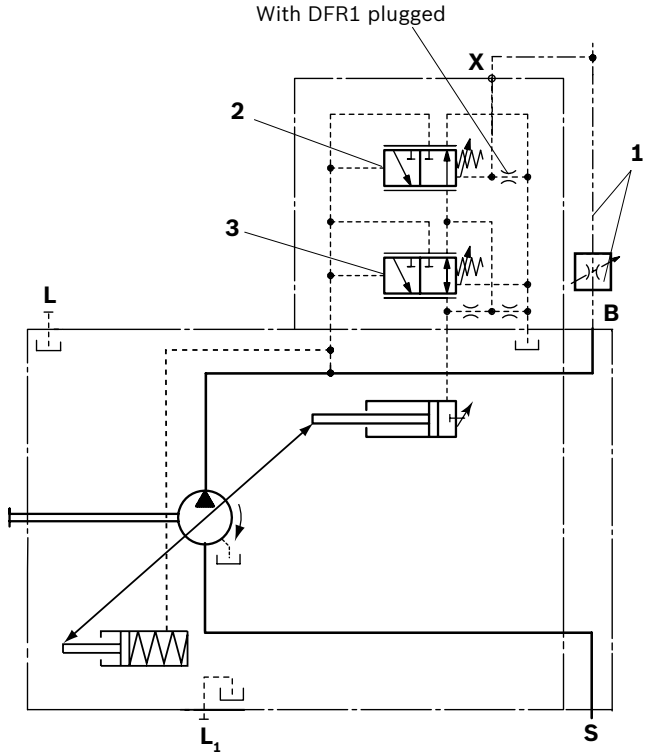

▼ **Circuit diagram, size 140**

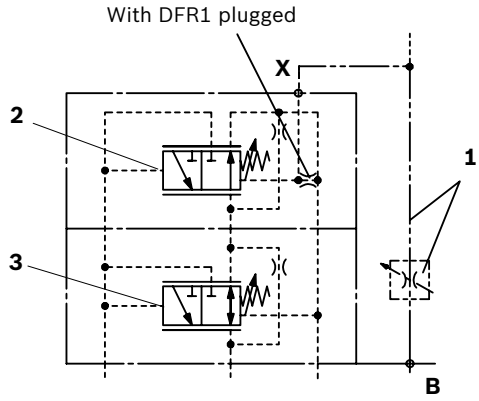

1 The metering orifice (control block) and the line is not included in the scope of delivery.
2 Pressure and flow controller (**FR**).
3 Pressure controller (**DR**)

For further information see page 14

1) In order to prevent damage to the pump and the system, the permissible setting range must not be exceeded. The range of possible settings at the valve is higher.
2) Zero stroke pressure from pressure setting Δp on controller (**2**)

Differential pressure Δ*p*:

- Standard setting: 14 bar
  If another setting is required, please state in plain text.
- Setting range: 14 bar to 22 bar

Relieving the load on port **X** to the reservoir results in a zero stroke (“standby”) pressure which lies about 1 to 2 bar higher than the defined differential pressure Δp, however, system influences are not taken into account.

Controller data

DR pressure controller data see page 11.

Maximum flow deviation measured at drive speed n = 1500 rpm.

NG		18	28	45	71	88	100	140
Flow deviation	$\Delta q_{V\,max}$ [l/min]	0.9	1.0	1.8	2.8	3.4	4.0	6.0
Hysteresis and repeat-ability	Δp [bar]	maximum 4						
Pilot fluid consumption	[l/min]	maximum approx. 3 to 4.5 (DFR) maximum approx. 3 (DFR1)						

DFLR – Pressure, flow and power control

Pressure controller equipped like DR, see page 11.
Equipment of the flow controller like DFR1, see page 13
In order to achieve a constant drive torque with varying working pressures, the swivel angle and with it the output flow from the axial piston pump is varied so that the product of flow and pressure remains constant.
Flow control is possible below the power control curve.

▼ **Characteristic curve and torque characteristic**

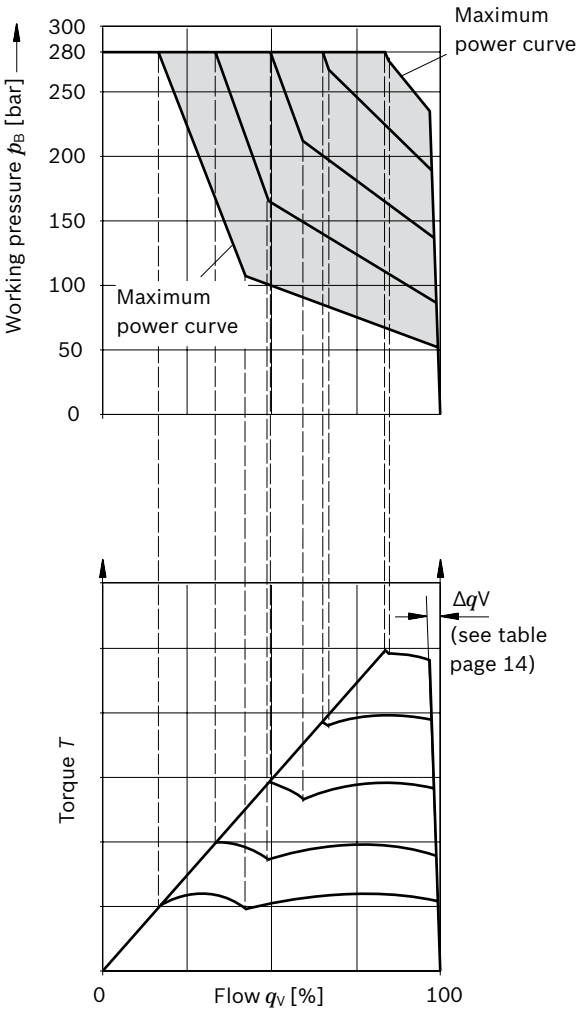

Please contact us regarding beginning of control at < 50 bar

When ordering please state the power characteristics to be set at the factory in plain text, e.g. 20 kW at 1500 rpm.

▼ **Circuit diagram, sizes 28 to 100**

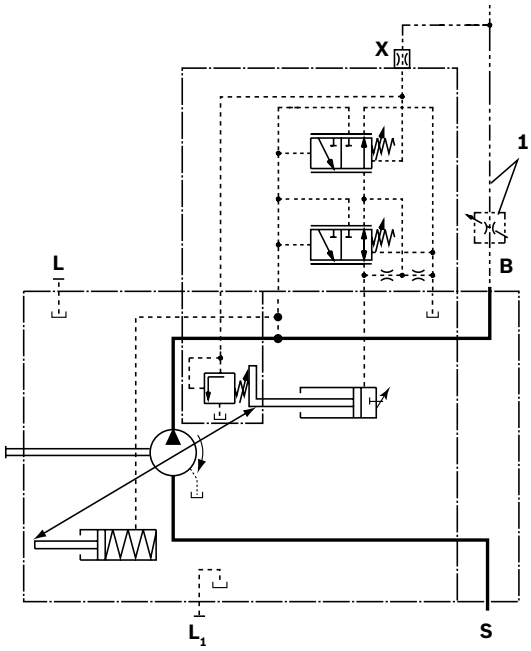

▼ **Circuit diagram, size 140**

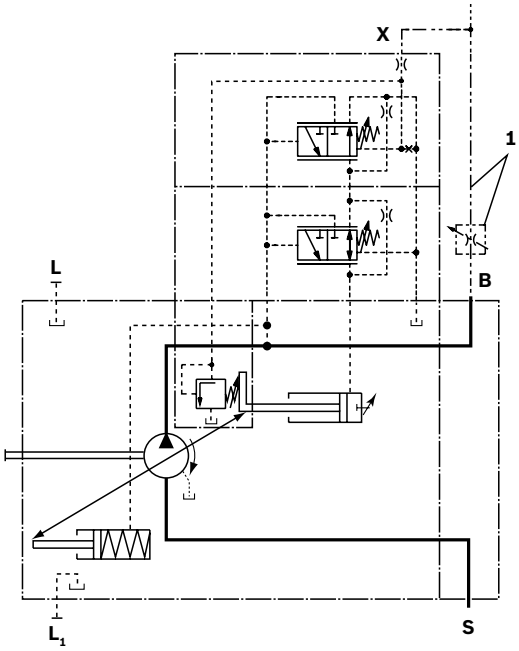

1 The metering orifice (control block) and the line is not included in the scope of delivery.

Controller data

For technical data of pressure controller DR see page 11.
For technical data of flow controller FR see page 14.
Control fluid consumption approx. 5.5 l/min max.

ED – Electrohydraulic pressure control

The ED valve is set to a certain pressure by a specified variable solenoid current.
With changes on the consumer (load pressure), this causes an increase or decrease in the pump swivel angle (flow) in order to maintain the electrically set pressure level.
The pump thus only delivers as much hydraulic fluid as the consumers can take. The desired pressure level can be set steplessly by varying the solenoid current.
As the solenoid current signal drops towards zero, the pressure will be limited to p_{max} by an adjustable hydraulic pressure cut-off (secure fail safe function in case of power failure, e.g. for fan speed control). The swivel time characteristic of the ED control was optimized for the use as a fan drive system.
When ordering, specify the type of application in plain text.

▼ **Static current-pressure characteristic curve ED**
(negative characteristic curve measured with pump in zero stroke)

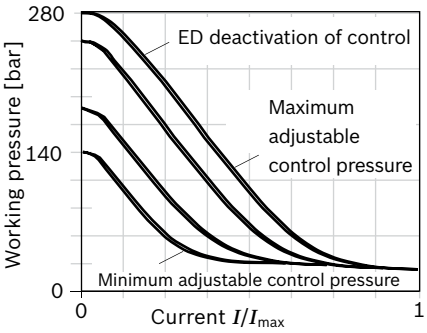

▶ Hysteresis static current-pressure characteristic curve < 3 bar.

▼ **Flow-pressure characteristic curve**

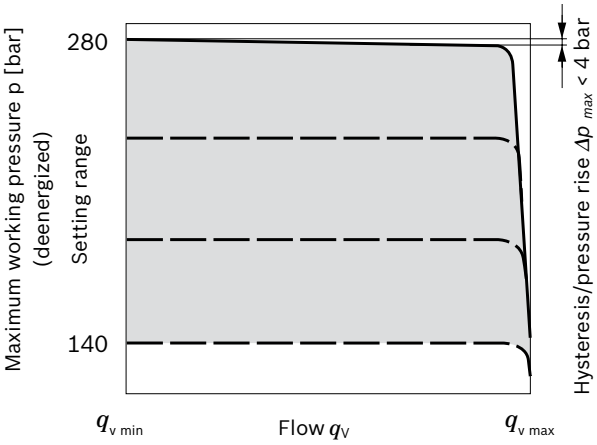

Characteristic curves valid at n_1 = 1500 rpm and t_{fluid} = 50 °C.
Control fluid consumption: 3 to 4.5 l/min.
For standby standard setting, see diagram on right, other values on request.

▼ **Influence of the pressure setting on standby (maximally energized)**

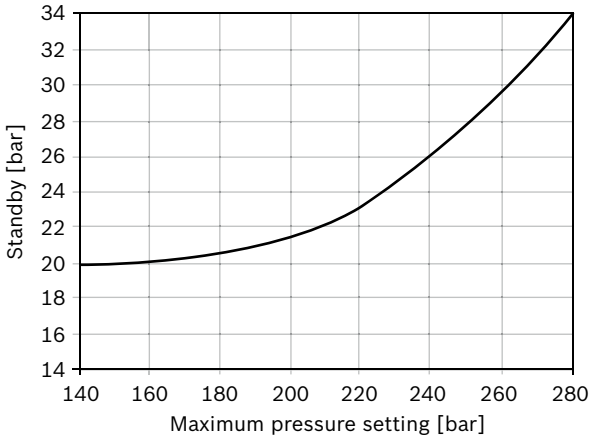

▼ **Circuit diagram ED71/ED72**

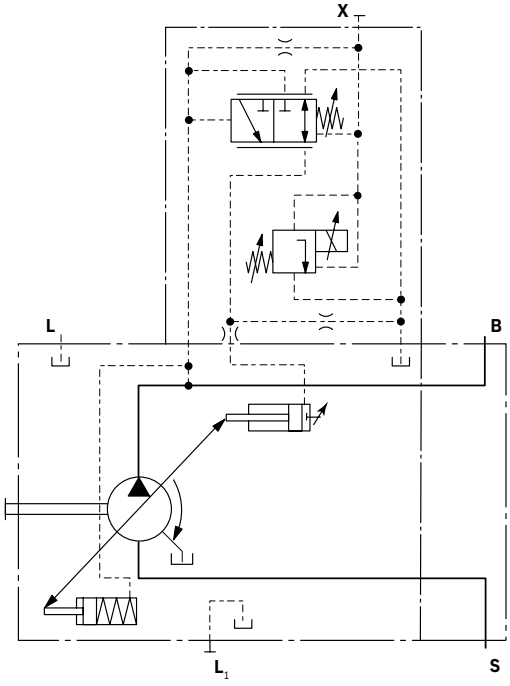

Technical data, solenoid	ED71	ED72
Voltage	12 V (±20%)	24 V (±20%)
Control current		
Start of control at p_{max}	0 mA	0 mA
Start of control at p_{min}	1200 mA	600 mA
Current limit	1.54 A	0.77 A
Nominal resistance (at 20 °C)	5.5 Ω	22.7 Ω
Dither frequency	100 to 200 Hz	100 to 200 Hz
Duty cycle	100%	100%
Electronic controls and type of protection, see page 44		
Operating temperature range at valve -20 °C to +115 °C		

ER – Electrohydraulic pressure control

The ER valve is set to a certain pressure by a specified variable solenoid current.
When changing the consumer (load pressure), this causes an increase or decrease in the pump swivel angle (flow) in order to maintain the electrically set pressure level.
The pump thus only delivers as much hydraulic fluid as the consumers can take. The desired pressure level can be set steplessly by varying the solenoid current.
If the solenoid current goes to zero, the pressure is limited to p_{min} (standby) by the adjustable, hydraulic pressure cut-off.

Observe project planning note.

▼ **Current-pressure characteristic curve**
(positive characteristic curve measured with pump in zero stroke)

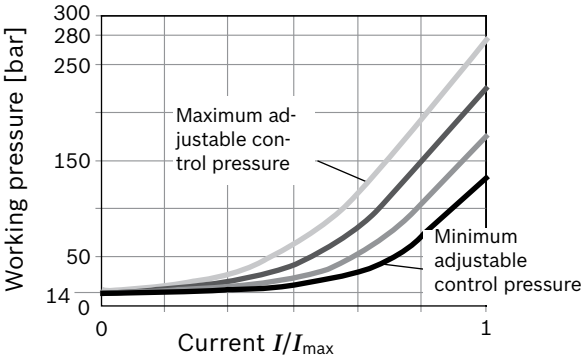

▶ Hysteresis static < 3 bar.

▼ **Flow-pressure characteristic curve**

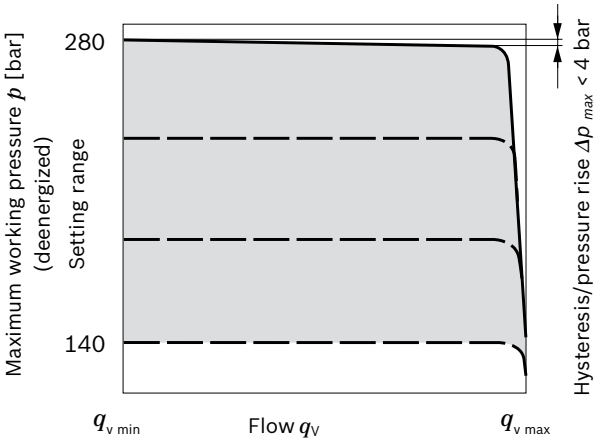

▶ Characteristic curve valid at n_1 = 1500 rpm and θ_{fluid} = 50 °C.
▶ Control fluid consumption: 3 to 4.5 l/min.
▶ Standby standard setting 14 bar. Other values on request.
▶ Influence of pressure setting on stand by ±2 bar

▼ **Circuit diagram**

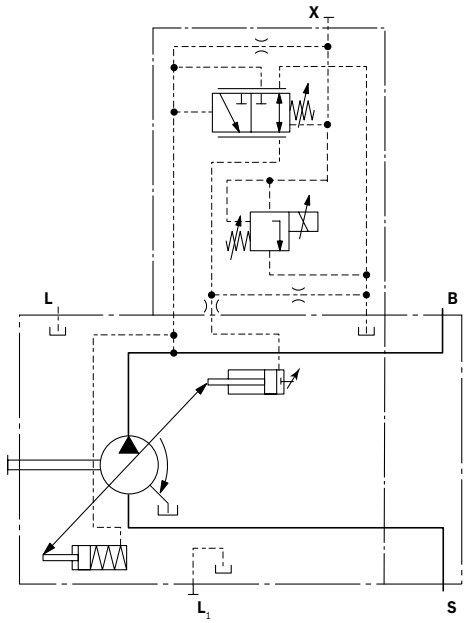

Technical data, solenoid	ER71	ER72
Voltage	12 V (±20%)	24 V (±20%)
Control current		
Start of control at p_{min}	100 mA	50 mA
End of control at p_{max}	1200 mA	600 mA
Current limit	1.54 A	0.77 A
Nominal resistance (at 20 °C)	5.5 Ω	22.7 Ω
Dither frequency	100 to 200 Hz	100 to 200 Hz
Duty cycle	100%	100%
Electronic controls and type of protection, see page 44		
Operating temperature range at valve -20 °C to +115 °C		

Project planning note!
Excessive current levels (I > 1200 mA at 12 V or I > 600 mA at 24 V) to the ER solenoid can result in undesired pressure increases which can lead to pump or system damage. Therefore:
▶ Use I_{max} current limiter solenoids.
▶ An intermediate plate pressure controller can be used to protect the pump in the event of overflow.
An accessory kit with intermediate plate pressure controller can be ordered from Bosch Rexroth under part number R902490825.

Dimensions, size 18

DFR/DFR1 – Pressure flow controller, hydraulic, clockwise rotation

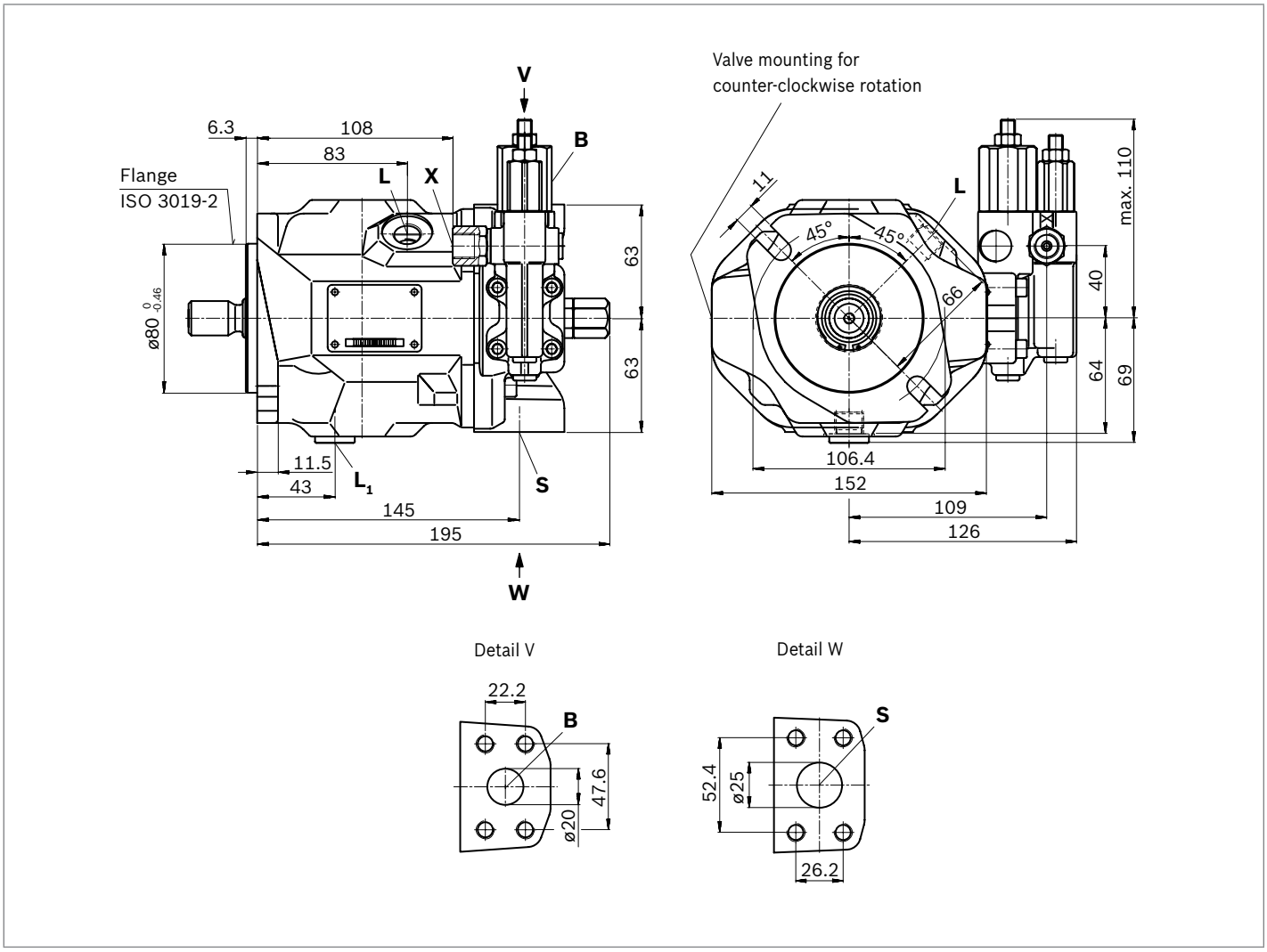

▼ **Splined shaft 3/4 in (SAE J744)**

S – 11T 16/32DP[1)]

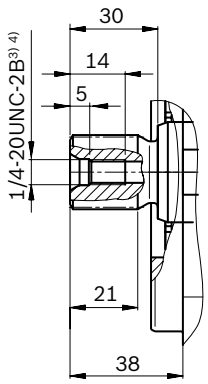

▼ **Splined shaft 3/4 in (SAE J744)**

R – 11T 16/32DP[1)2)]

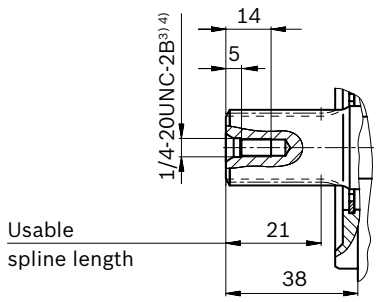

▼ **Parallel keyed shaft, DIN 6885**

P – A6 × 6 × 25

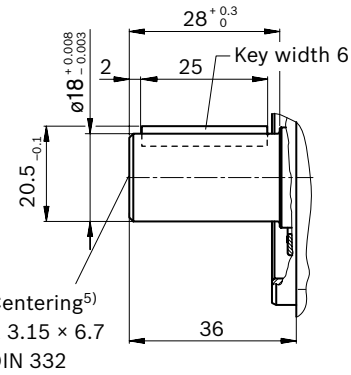

Ports		Standard	Size[4)]	$p_{max\ abs}$ [bar][6)]	State[10)]
B	Working port (standard pressure series) Fastening thread	SAE J518[7)] DIN 13	3/4 in M10 × 1.5; 17 deep	350	O
S	Suction port (standard pressure series) Fastening thread	SAE J518[7)] DIN 13	1 in M10 × 1.5; 17 deep	10	O
L	Drain port	DIN 3852[8)]	M16 × 1.5; 12 deep	2	O[9)]
L_1	Drain port	DIN 3852[8)]	M16 × 1.5; 12 deep	2	X[9)]
X	Pilot pressure port	DIN 3852	M14 × 1.5; 12 deep	350	O
X	Pilot pressure port with DG-control	DIN ISO 228	G1/4 in; 12 deep	350	O

1) Involute spline according to ANSI B92.1a, 30° pressure angle, flat root, side fit, tolerance class 5
2) Splines according to ANSI B92.1a, spline runout is a deviation from standard.
3) Thread according to ASME B1.1
4) For notes on tightening torques, see the instruction manual
5) Coupling axially secured, e.g. with a clamp coupling or radially mounted clamping screw
6) Depending on the application, momentary pressure peaks can occur. Keep this in mind when selecting measuring devices and fittings.
7) Metric fastening thread is a deviation from standard.
8) The countersink can be deeper than as specified in the standard.
9) Depending on the installation position, L or L_1 must be connected (also see installation instructions starting on page 45).
10) O = Must be connected (plugged when delivered)
X = Plugged (in normal operation)

▼ **DG – Two-point control, direct operated**

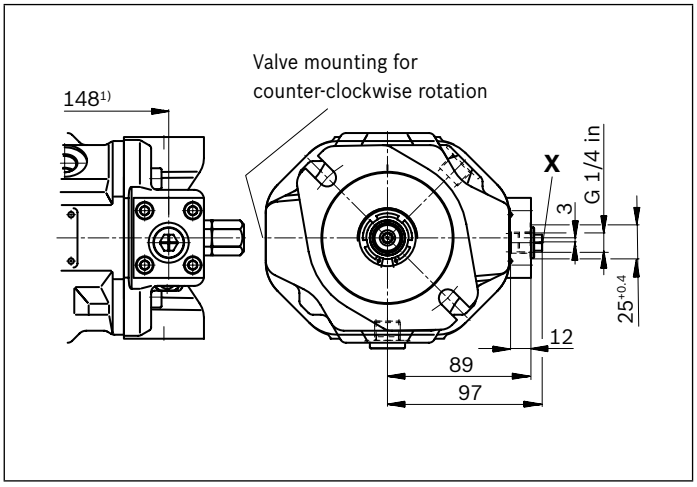

▼ **DR – Pressure controller**

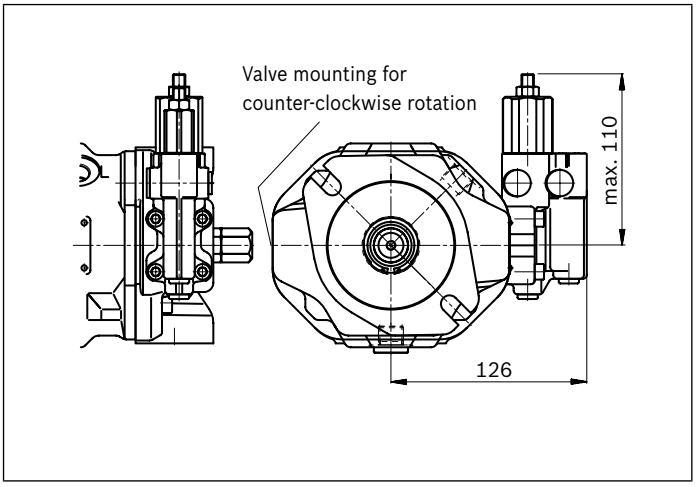

▼ **DRG – Pressure controller, remote controlled**

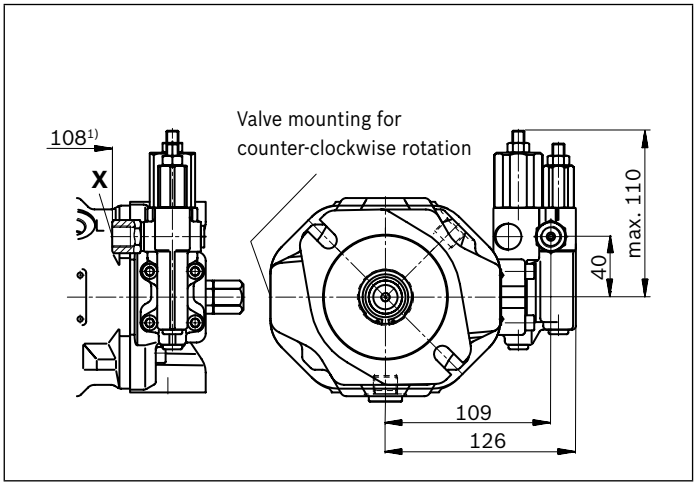

▼ **ED7., ER7. – Electrohydraulic pressure control**

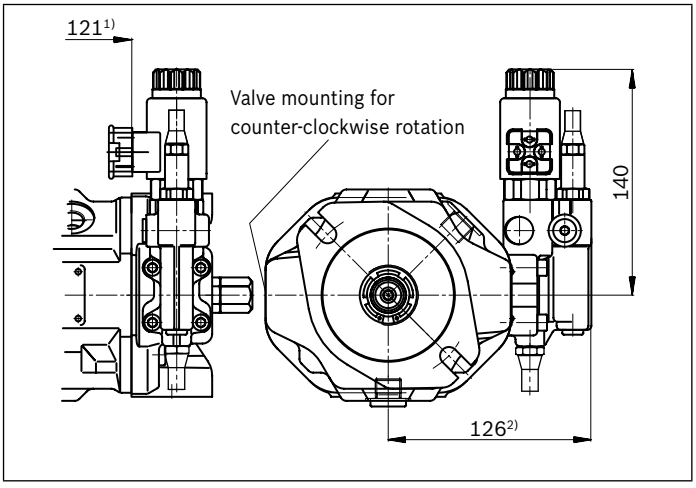

1) To flange surface
2) ER7.: 161 mm if using an intermediate plate pressure controller

Dimensions, size 28

DFR/DFR1 – Pressure flow controller, hydraulic, clockwise rotation

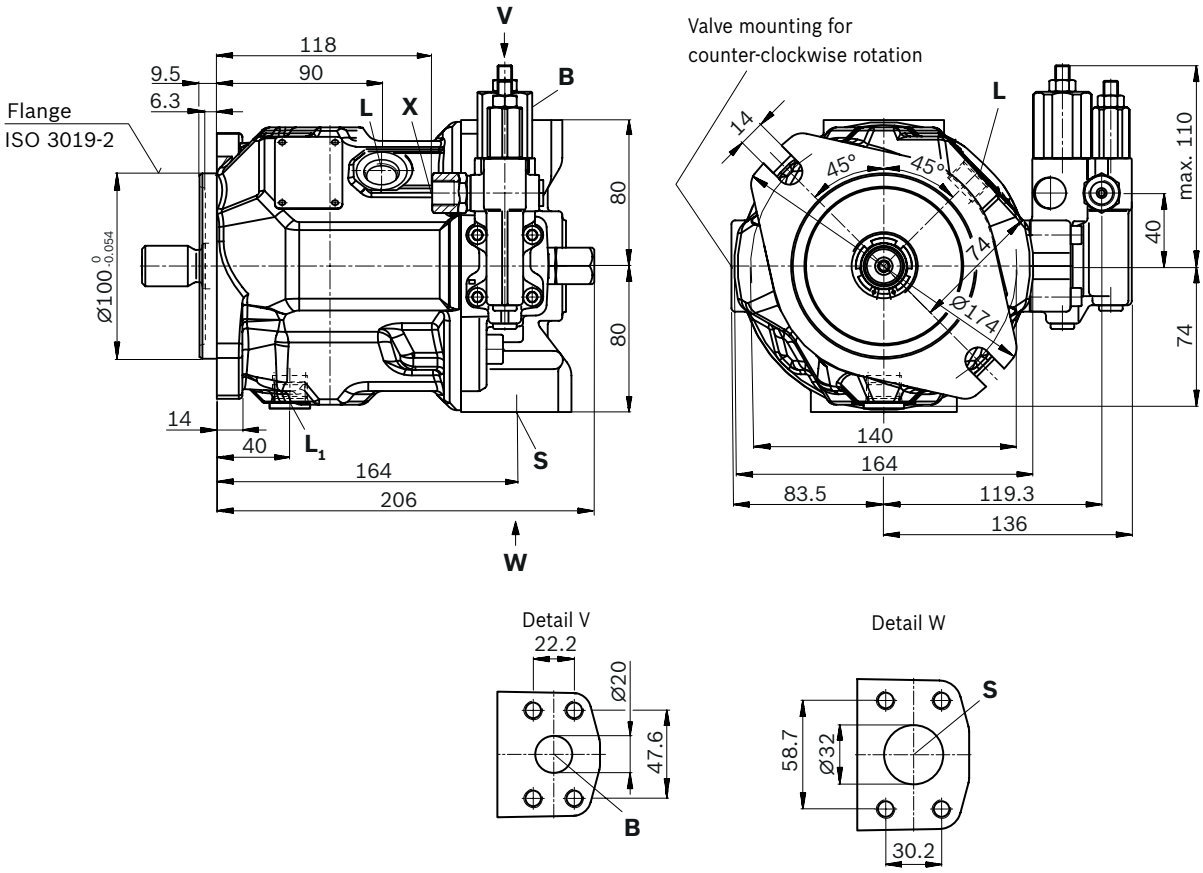

▼ **Splined shaft 7/8 in (SAE J744)**

S – 13T 16/32DP[1)]

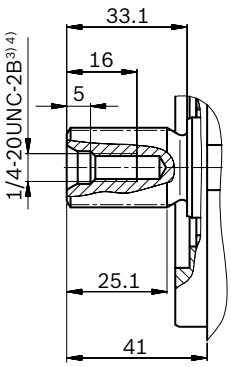

▼ **Splined shaft 7/8 in (SAE J744)**

R – 13T 16/32DP[1)2)]

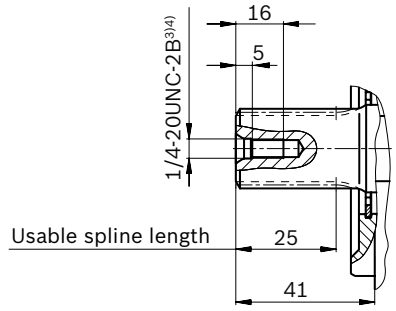

▼ **Parallel keyed shaft, DIN 6885**

P – A6 × 6 × 32

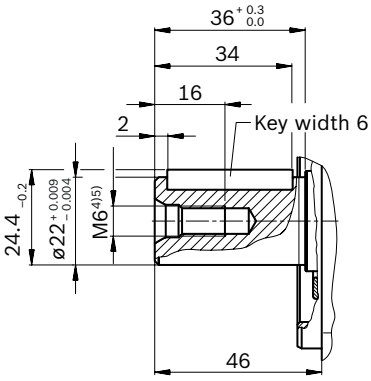

Ports		Standard	Size[4)]	$p_{max\ abs}$ [bar][6)]	State[10)]
B	Working port (standard pressure series) Fastening thread	SAE J518[7)] DIN 13	3/4 in M10 × 1.5; 17 deep	350	O
S	Suction port (standard pressure series) Fastening thread	SAE J518[7)] DIN 13	1 1/4 in M10 × 1.5; 17 deep	10	O
L	Drain port	DIN 3852[8)]	M18 × 1.5; 12 deep	2	O[9)]
L_1	Drain port	DIN 3852[8)]	M18 × 1.5; 12 deep	2	X[9)]
X	Pilot pressure port	DIN 3852	M14 × 1.5; 12 deep	350	O
X	Pilot pressure port with DG-control	DIN ISO 228	G1/4 in; 12 deep	350	O

1) Involute spline according to ANSI B92.1a, 30° pressure angle, flat root, side fit, tolerance class 5
2) Splines according to ANSI B92.1a, spline runout is a deviation from standard.
3) Thread according to ASME B1.1
4) For notes on tightening torques, see the instruction manual
5) Thread according to DIN 13, center bore according to DIN 332-2
6) Depending on the application, momentary pressure peaks can occur. Keep this in mind when selecting measuring devices and fittings.
7) Metric fastening thread is a deviation from standard.
8) The countersink can be deeper than as specified in the standard.
9) Depending on the installation position, L or L_1 must be connected (also see installation instructions starting on page 45).
10) O = Must be connected (plugged when delivered)
X = Plugged (in normal operation)

▼ **DG – Two-point control, direct operated**

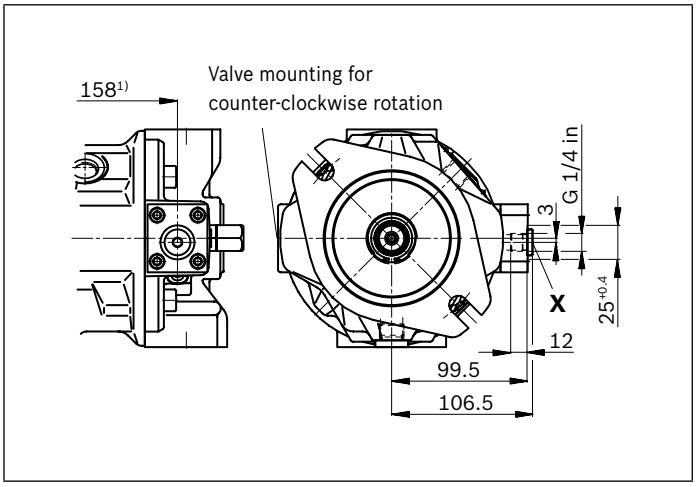

▼ **DFLR – Pressure, flow and power controller**

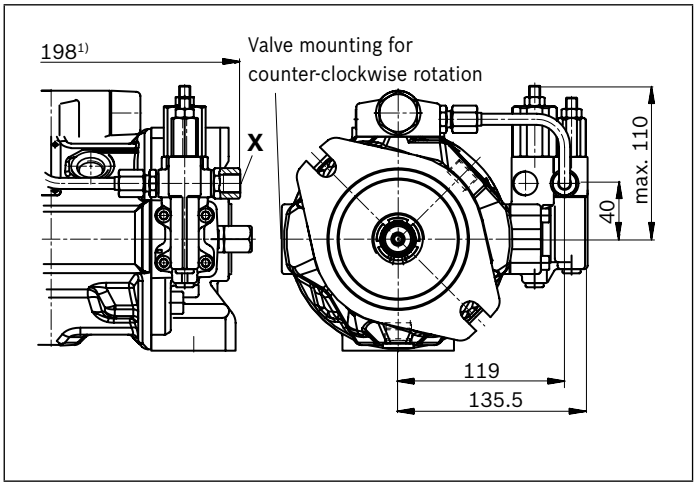

▼ **DR – Pressure controller**

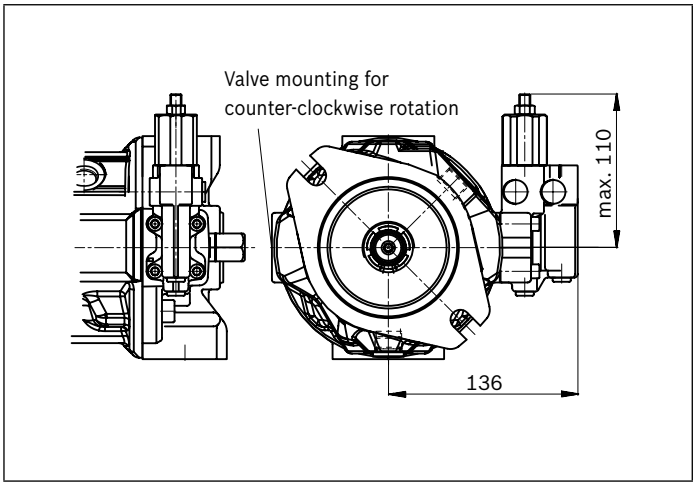

▼ **DRG – Pressure controller, remote controlled**

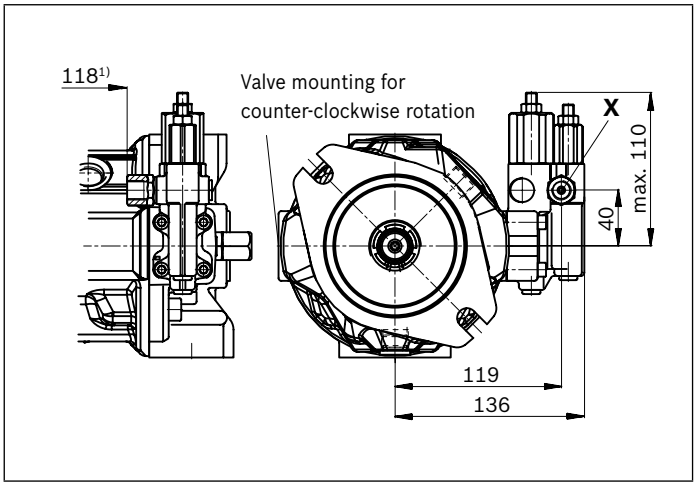

▼ **ED7., ER7. – Electrohydraulic pressure control**

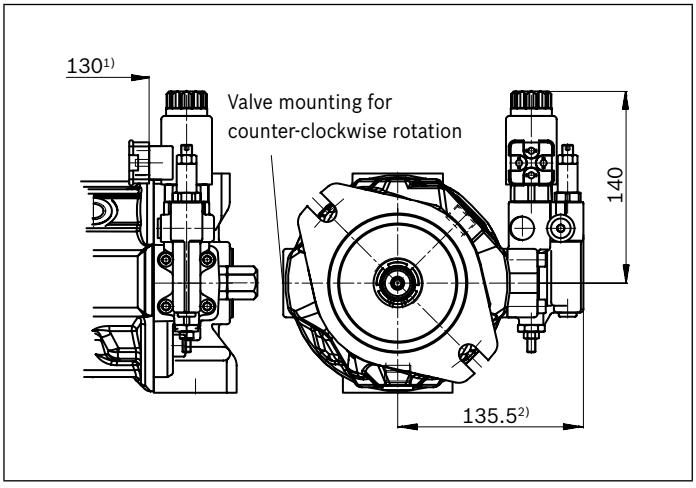

1) To flange surface
2) ER7.: 170.5 mm if using an intermediate plate pressure controller

Dimensions, size 45

DFR/DFR1 – Pressure flow controller, hydraulic, clockwise rotation

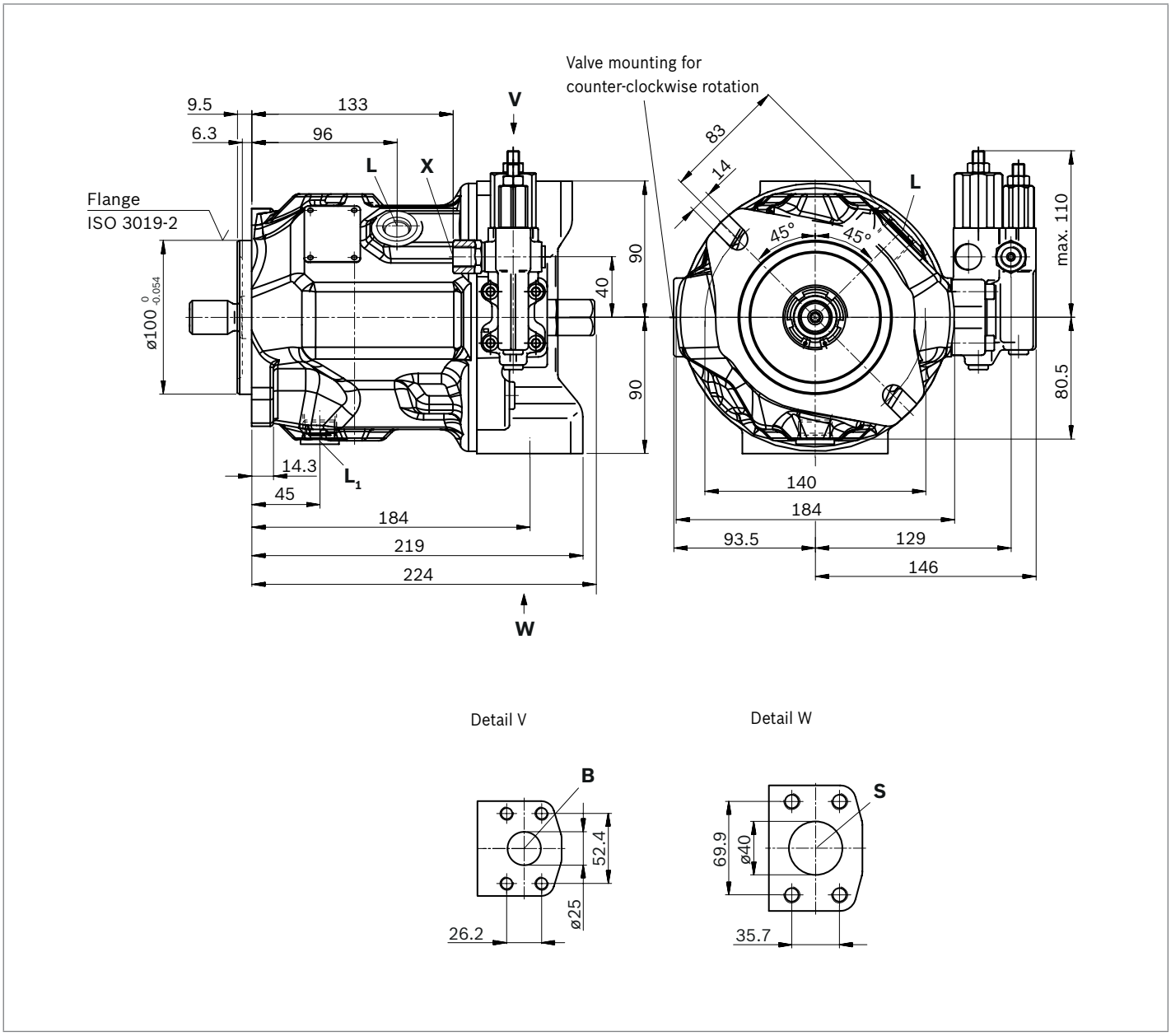

▼ **Splined shaft 1 in (SAE J744)**

S – 15T 16/32DP[1)]

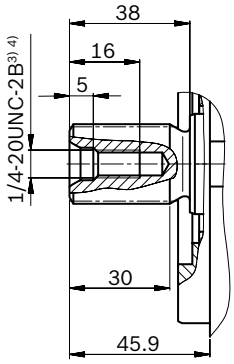

▼ **Splined shaft 1 in (SAE J744)**

R – 15T 16/32DP[1)2)]

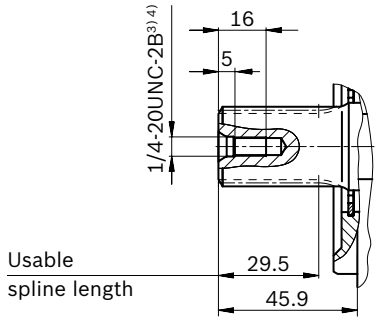

▼ **Parallel keyed shaft, DIN 6885**

P – A8 × 7 × 36

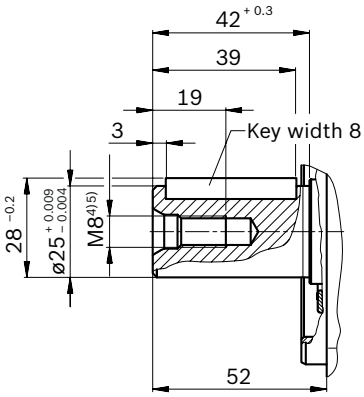

Ports		Standard	Size[4)]	$p_{max\ abs}$ [bar][6)]	State[10)]
B	Working port (standard pressure series) Fastening thread	SAE J518[7)] DIN 13	1 in M10 × 1.5; 17 deep	350	O
S	Suction port (standard pressure series) Fastening thread	SAE J518[7)] DIN 13	1 1/2 in M12 × 1.75; 20 deep	10	O
L	Drain port	DIN 3852[8)]	M22 × 1.5; 14 deep	2	O[9)]
L_1	Drain port	DIN 3852[8)]	M22 × 1.5; 14 deep	2	X[9)]
X	Pilot pressure port	DIN 3852	M14 × 1.5; 12 deep	350	O
X	Pilot pressure port with DG-control	DIN ISO 228	G1/4 in; 12 deep	350	O

1) Involute spline according to ANSI B92.1a, 30° pressure angle, flat root, side fit, tolerance class 5
2) Splines according to ANSI B92.1a, spline runout is a deviation from standard.
3) Thread according to ASME B1.1
4) For notes on tightening torques, see the instruction manual
5) Thread according to DIN 13, center bore according to DIN 332-2
6) Depending on the application, momentary pressure peaks can occur. Keep this in mind when selecting measuring devices and fittings.
7) Metric fastening thread is a deviation from standard.
8) The countersink can be deeper than as specified in the standard.
9) Depending on the installation position, L or L_1 must be connected (also see installation instructions starting on page 45).
10) O = Must be connected (plugged when delivered)
X = Plugged (in normal operation)

▼ **DG – Two-point control, direct operated**

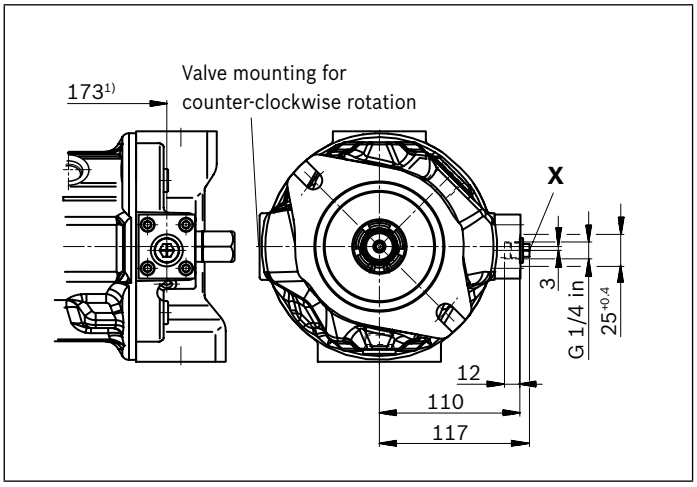

▼ **DFLR – Pressure, flow and power controller**

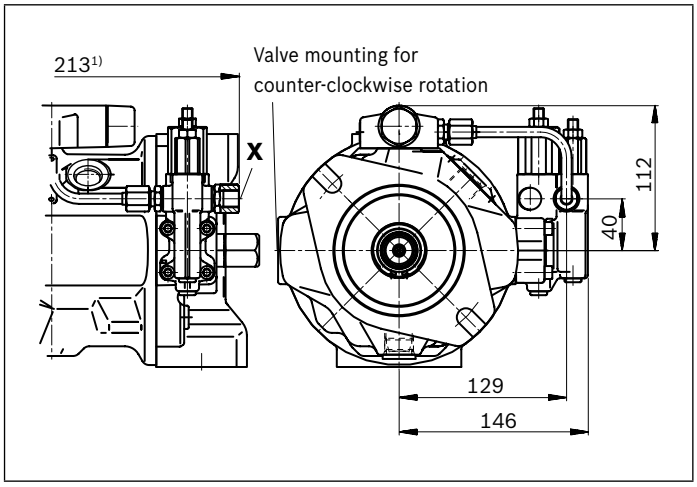

▼ **DR – Pressure controller**

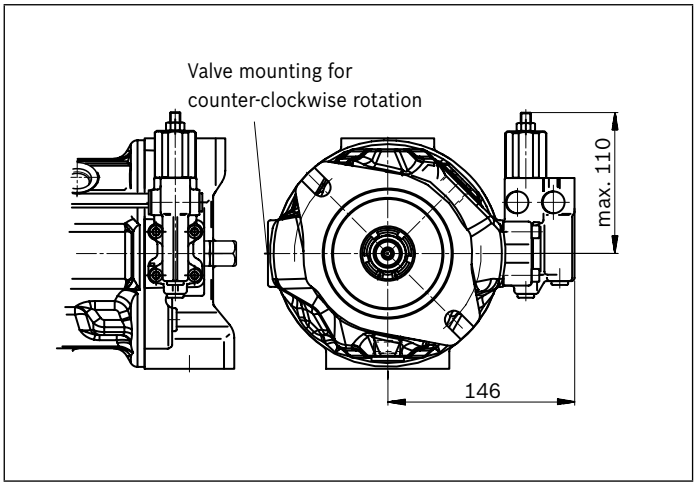

▼ **DRG – Pressure controller, remote controlled**

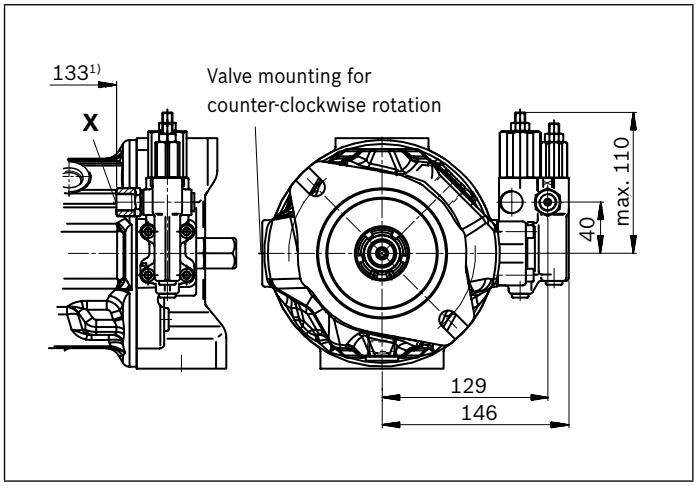

▼ **ED7., ER7. – Electrohydraulic pressure control**

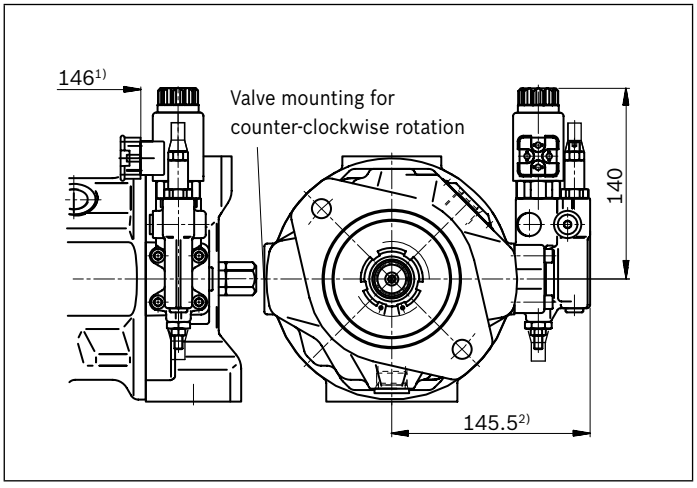

1) To flange surface
2) ER7.: 180.5 mm if using an intermediate plate pressure controller

Dimensions sizes 71 and 88

DFR/DFR1 – Pressure flow controller, hydraulic, clockwise rotation

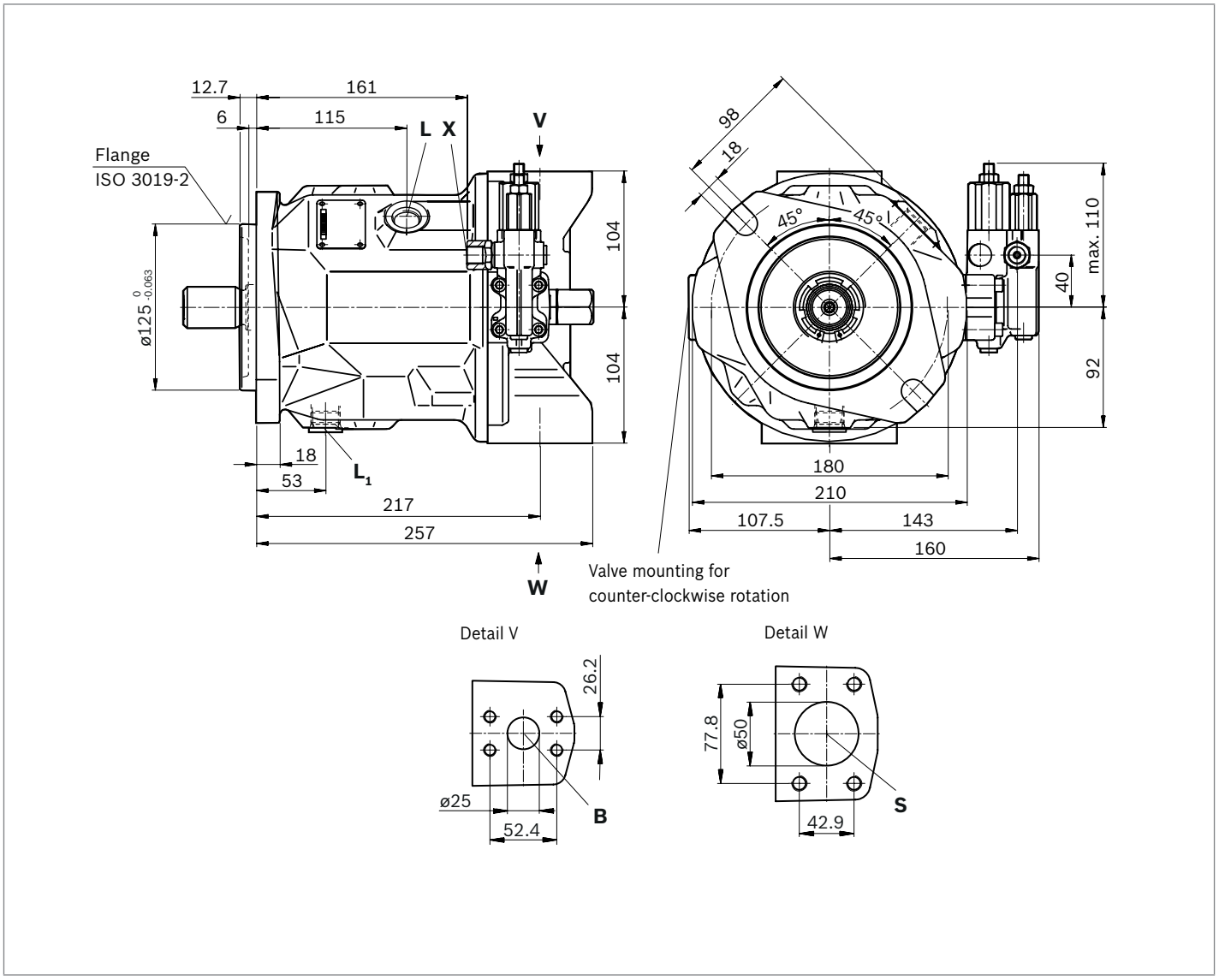

▼ **Splined shaft 1 1/4 in (SAE J744)**

S – 14T 12/24DP[1)]

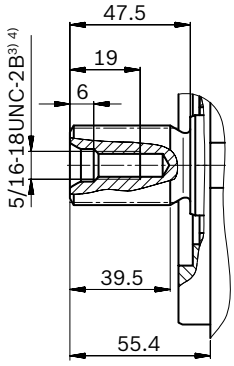

▼ **Splined shaft 1 1/4 in (SAE J744)**

R – 14T 12/24DP[1)2)]

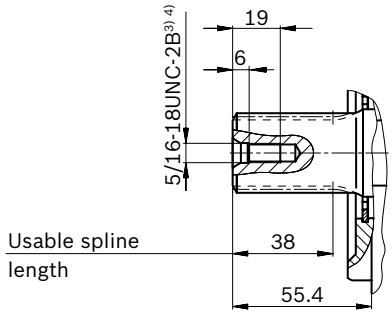

▼ **Parallel keyed shaft, DIN 6885**

P – A10 × 8 × 45

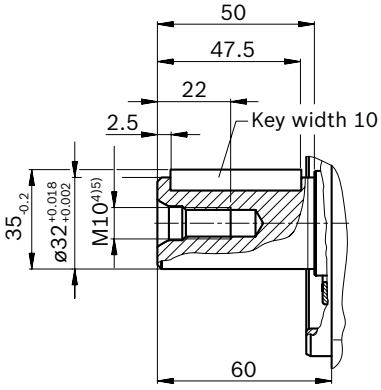

Ports		Standard	Size[4)]	$p_{max\ abs}$ [bar][6)]	State[10)]
B	Working port (standard pressure series) Fastening thread	SAE J518[7)] DIN 13	1 in M10 × 1.5; 17 deep	350	O
S	Suction port (standard pressure series) Fastening thread	SAE J518[7)] DIN 13	2 in M12 × 1.75; 20 deep	10	O
L	Drain port	DIN 3852[8)]	M22 × 1.5; 14 deep	2	O[9)]
L_1	Drain port	DIN 3852[8)]	M22 × 1.5; 14 deep	2	X[9)]
X	Pilot pressure port	DIN 3852	M14 × 1.5; 12 deep	350	O
X	Pilot pressure port with DG-control	DIN ISO 228	G1/4 in; 12 deep	350	O

1) Involute spline according to ANSI B92.1a, 30° pressure angle, flat root, side fit, tolerance class 5
2) Splines according to ANSI B92.1a, spline runout is a deviation from standard.
3) Thread according to ASME B1.1
4) For notes on tightening torques, see the instruction manual
5) Thread according to DIN 13, center bore according to DIN 332-2
6) Depending on the application, momentary pressure peaks can occur. Keep this in mind when selecting measuring devices and fittings.
7) Metric fastening thread is a deviation from standard.
8) The countersink can be deeper than as specified in the standard.
9) Depending on the installation position, L or L_1 must be connected (also see installation instructions starting on page 45).
10) O = Must be connected (plugged when delivered)
X = Plugged (in normal operation)

▼ **DG – Two-point control, direct operated**

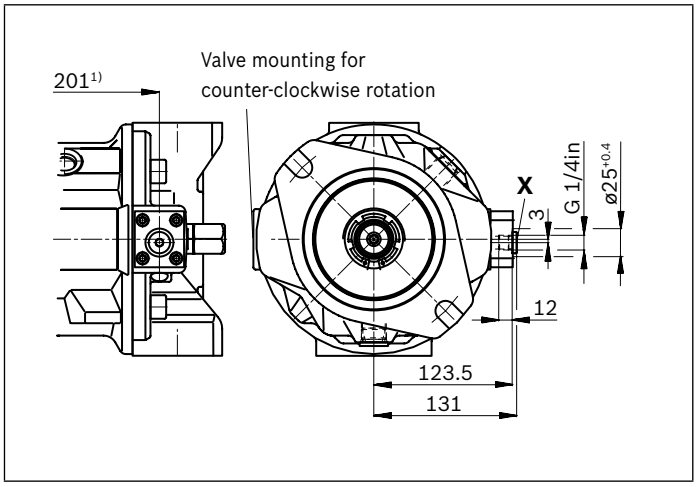

▼ **DFLR – Pressure, flow and power controller**

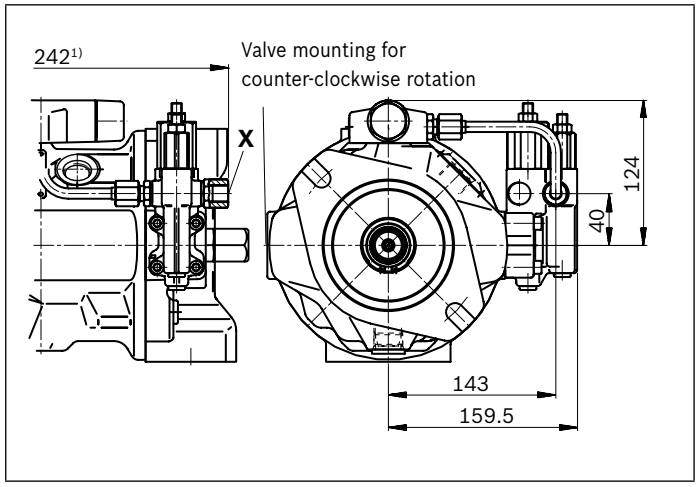

▼ **DR – Pressure controller**

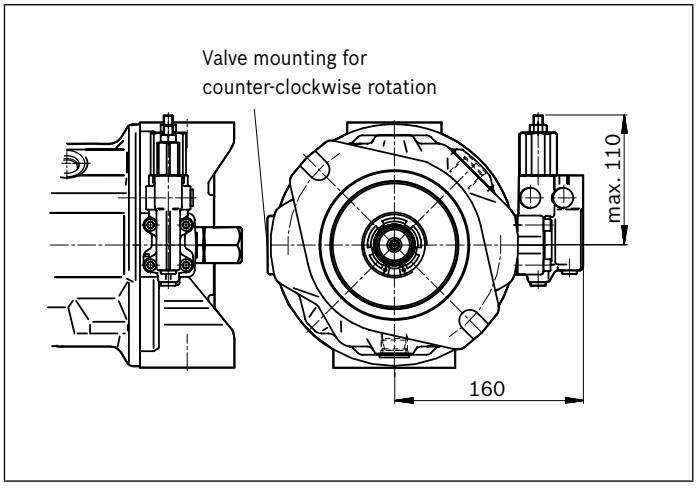

▼ **DRG – Pressure controller, remote controlled**

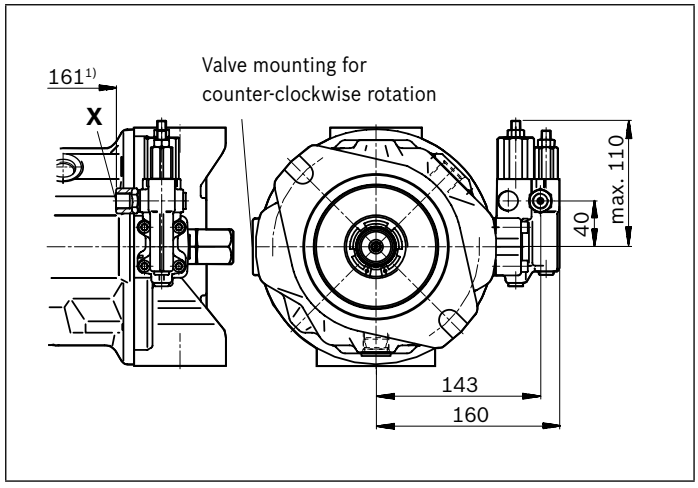

▼ **ED7., ER7. – Electrohydraulic pressure control**

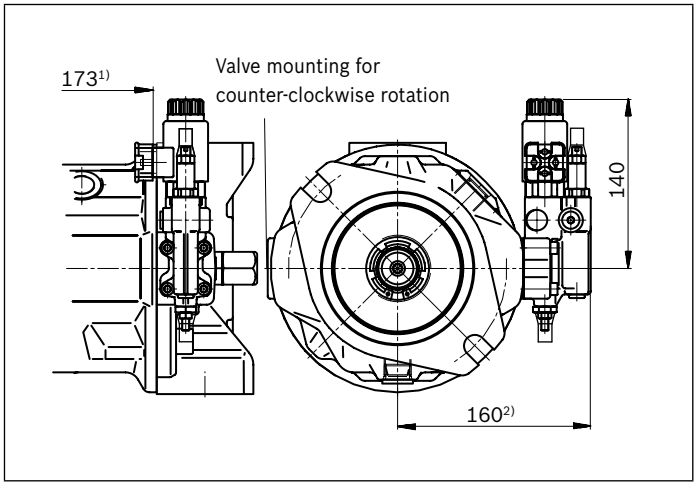

1) To flange surface
2) ER7.: 195 mm if using an intermediate plate pressure controller

Dimensions, size 100

DFR/DFR1 – Pressure flow controller, hydraulic, clockwise rotation

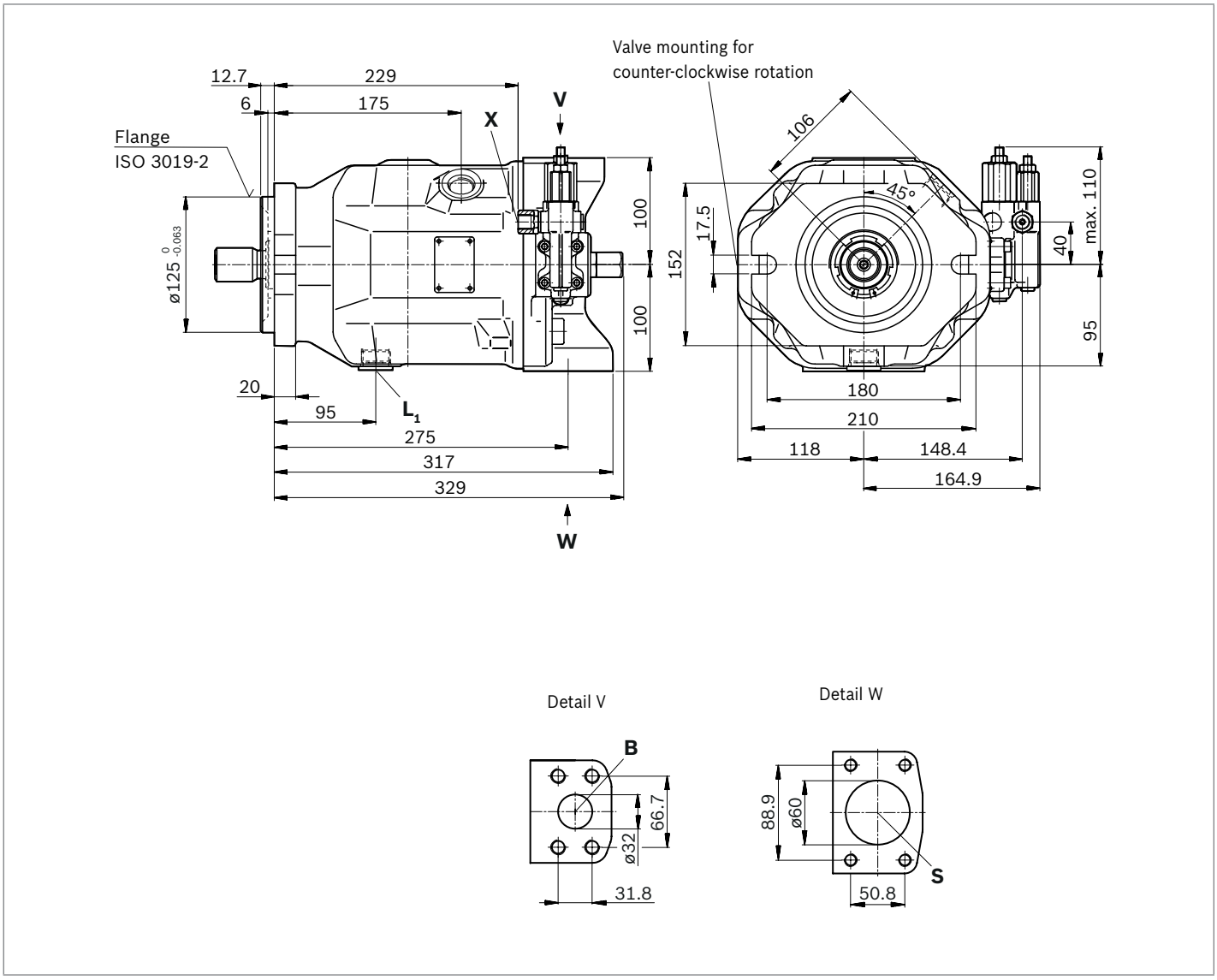

▼ **Splined shaft 1 1/2 in (SAE J744)**

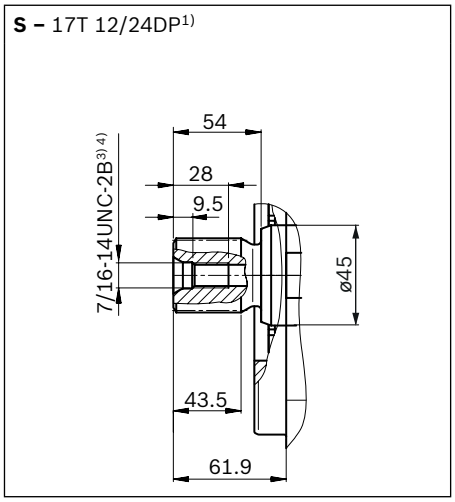

▼ **Parallel keyed shaft, DIN 6885**

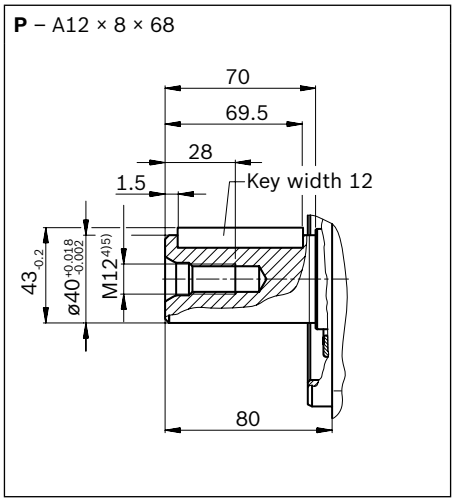

Ports		Standard	Size[4)]	$p_{max\ abs}$ [bar][6)]	State[10)]
B	Working port (high-pressure series) Fastening thread	SAE J518[7)] DIN 13	1 1/4 in M14 × 2; 19 deep	350	O
S	Suction port (standard pressure series) Fastening thread	SAE J518[7)] DIN 13	2 1/2 in M12 × 1.75; 17 deep	10	O
L	Drain port	DIN 3852[8)]	M27 × 2; 16 deep	2	O[9)]
L_1	Drain port	DIN 3852[8)]	M27 × 2; 16 deep	2	X[9)]
X	Pilot pressure port	DIN 3852	M14 × 1.5; 12 deep	350	O
X	Pilot pressure port with DG-control	DIN ISO 228	G1/4 in; 12 deep	350	O

1) Involute spline according to ANSI B92.1a, 30° pressure angle, flat root, side fit, tolerance class 5
2) Splines according to ANSI B92.1a, spline runout is a deviation from standard.
3) Thread according to ASME B1.1
4) For notes on tightening torques, see the instruction manual
5) Thread according to DIN 13, center bore according to DIN 332-2
6) Depending on the application, momentary pressure peaks can occur. Keep this in mind when selecting measuring devices and fittings.
7) Metric fastening thread is a deviation from standard.
8) The countersink can be deeper than as specified in the standard.
9) Depending on the installation position, L or L_1 must be connected (also see installation instructions starting on page 45).
10) O = Must be connected (plugged when delivered)
X = Plugged (in normal operation)

▼ **DG – Two-point control, direct operated**

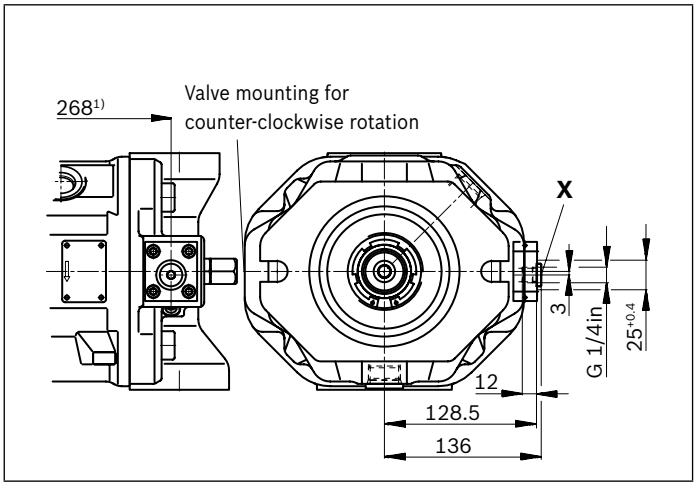

▼ **DFLR – Pressure, flow and power controller**

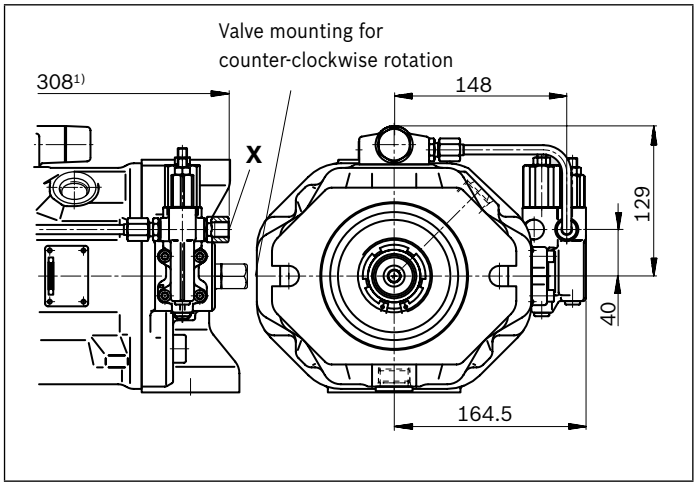

▼ **DR – Pressure controller**

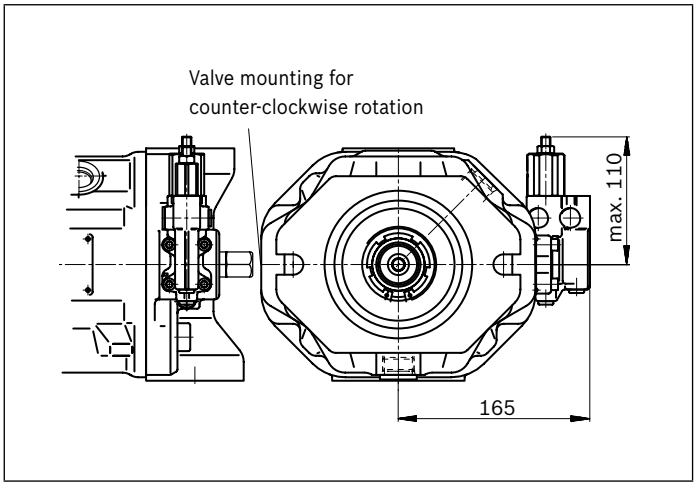

▼ **DRG – Pressure controller, remote controlled**

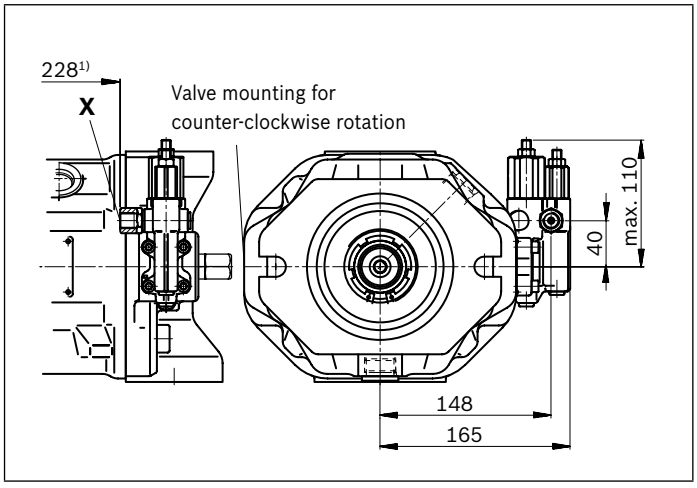

▼ **ED7., ER7. – Electrohydraulic pressure control**

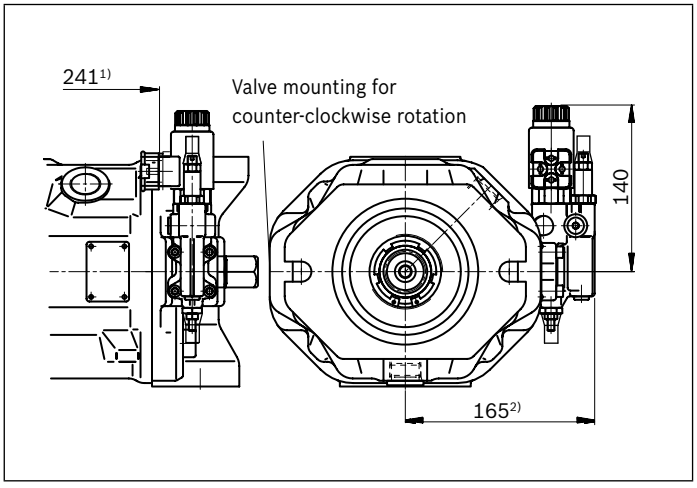

1) To flange surface
2) ER7.: 200 mm if using an intermediate plate pressure controller

Dimensions, size 140

DFR/DFR1 – Pressure flow controller, hydraulic, clockwise rotation, mounting flange D

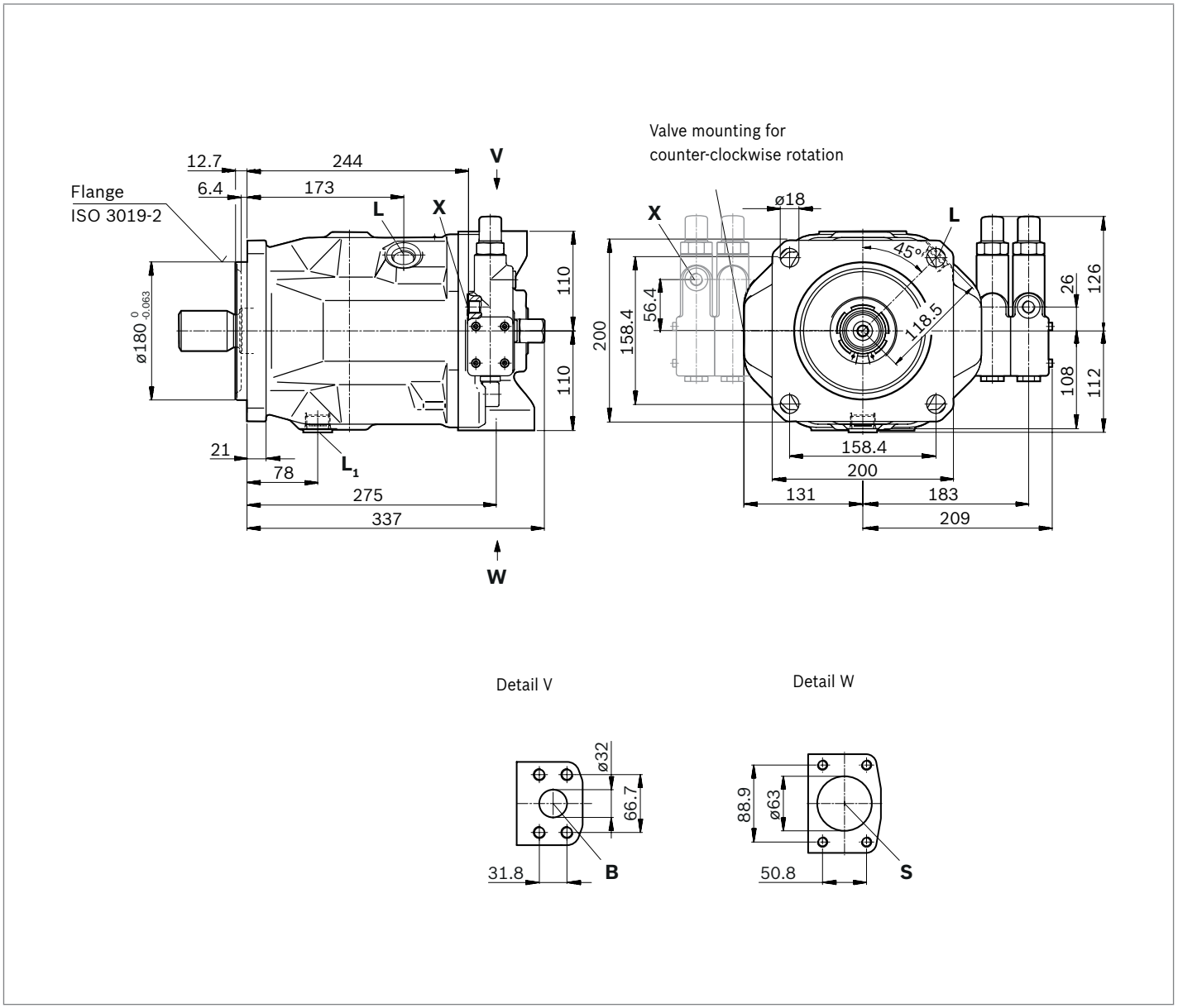

▼ **Splined shaft 1 3/4 in (SAE J744)**

S – 13T 8/16DP[1)]

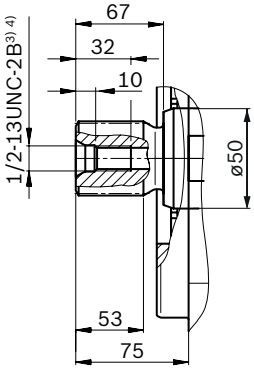

▼ **Parallel keyed shaft, DIN 6885**

P – A14 × 9 × 80

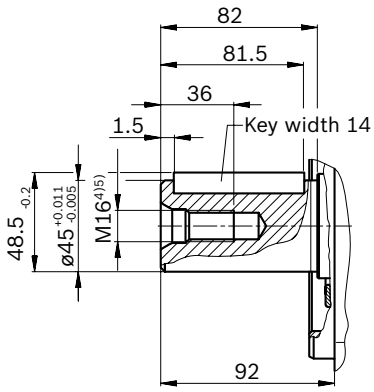

Ports		Standard	Size[4)]	$p_{max\ abs}$ [bar][6)]	State[10)]
B	Working port (high-pressure series) Fastening thread	SAE J518[7)] DIN 13	1 1/4 in M14 × 2; 19 deep	350	O
S	Suction port (standard pressure series) Fastening thread	SAE J518[7)] DIN 13	2 1/2 in M12 × 1.75; 17 deep	10	O
L	Drain port	DIN 3852[8)]	M27 × 2; 16 deep	2	O[9)]
L_1	Drain port	DIN 3852[8)]	M27 × 2; 16 deep	2	X[9)]
X	Pilot pressure port	DIN 3852	M14 × 1.5; 12 deep	350	O
X	Pilot pressure port with DG-control	DIN 3852	M14 × 1.5; 12 deep	350	O
M_H	High pressure measurement (only with control DG)	DIN 3852	M14 × 1.5; 12 deep	350	X

1) Involute spline according to ANSI B92.1a, 30° pressure angle, flat root, side fit, tolerance class 5
2) Splines according to ANSI B92.1a, spline runout is a deviation from standard.
3) Thread according to ASME B1.1
4) For notes on tightening torques, see the instruction manual
5) Thread according to DIN 13, center bore according to DIN 332-2
6) Depending on the application, momentary pressure peaks can occur. Keep this in mind when selecting measuring devices and fittings.
7) Metric fastening thread is a deviation from standard.
8) The countersink can be deeper than as specified in the standard.
9) Depending on the installation position, L or L_1 must be connected (also see installation instructions starting on page 45).
10) O = Must be connected (plugged when delivered)
X = Plugged (in normal operation)

▼ **DG – Two-point control, direct operated**

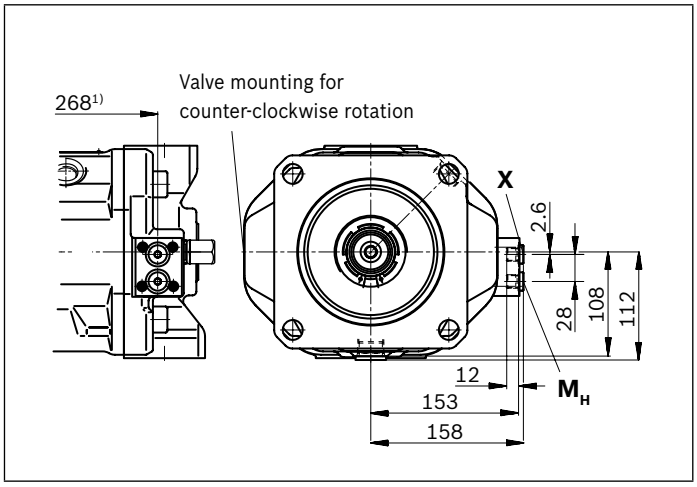

▼ **DFLR – Pressure, flow and power controller**

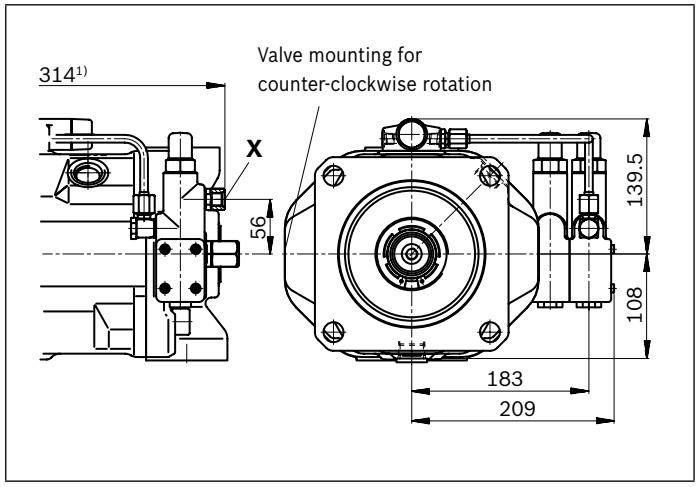

▼ **DR – Pressure controller**

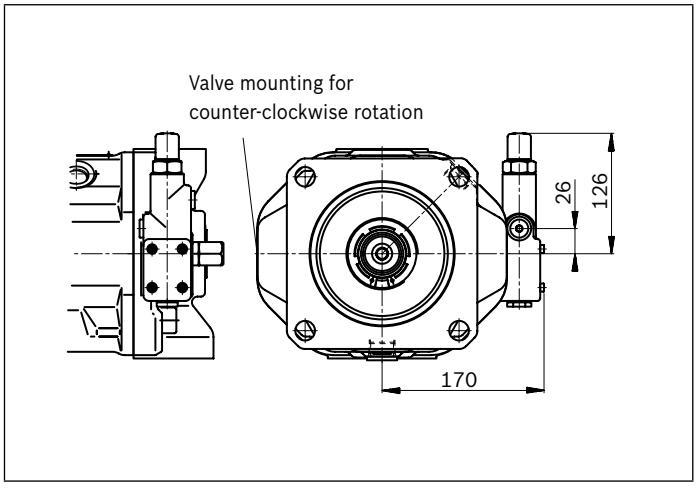

▼ **DRG – Pressure controller, remote controlled**

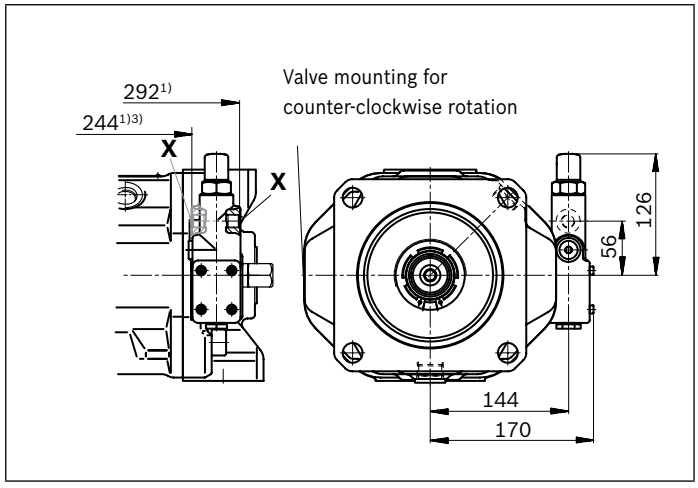

▼ **ED7., ER7. – Electrohydraulic pressure control**

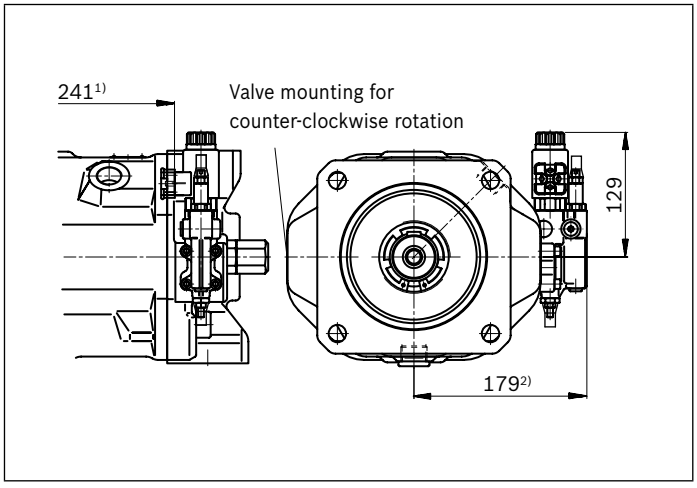

1) To flange surface
2) ER7.: 214 mm if using an intermediate plate pressure controller
3) For counter-clockwise rotation

Dimensions, through drive

Flange ISO 3019-1 (SAE)		Hub for splined shaft[1]		Availability over sizes							Code
Diameter	**Symbol**	**Diameter**		**18**	**28**	**45**	**71**	**88**	**100**	**140**	
82-2 (A)		5/8 in	9T 16/32DP	●	●	●	●	●	●	●	K01
		3/4 in	11T 16/32DP	●	●	●	●	●	●	●	K52

● = Available – = Not available

▼ **82-2**

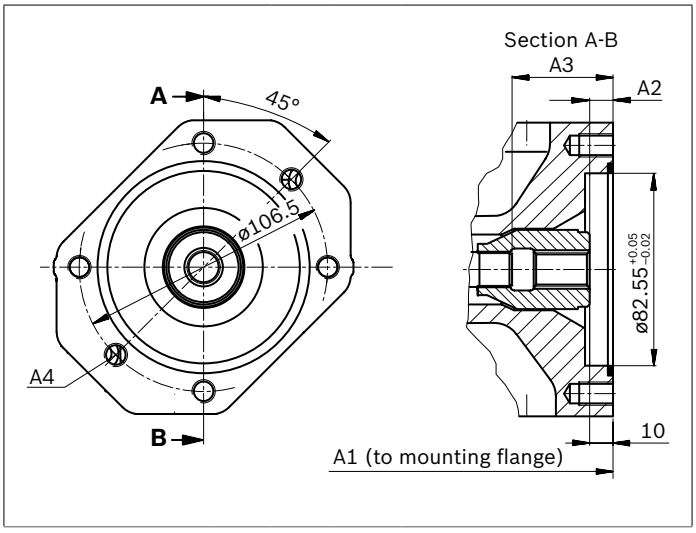

▼ **82-2**

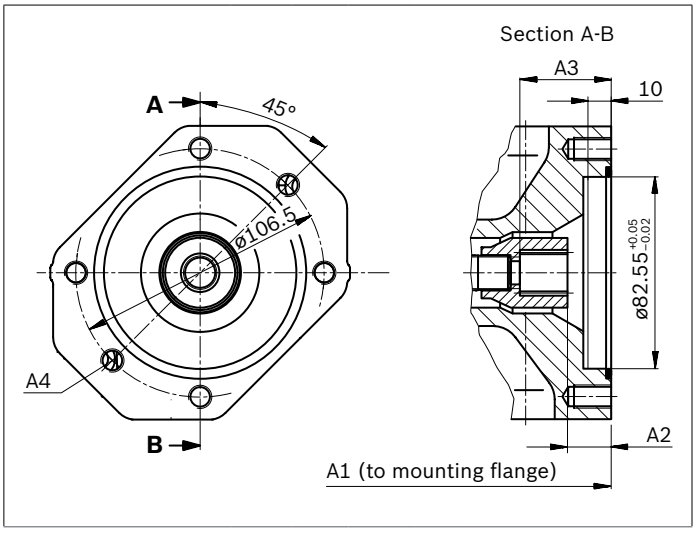

K01 (SAE J744 16-4 (A))	**NG**	**A1**	**A2**	**A3**	**A4**[2]
	18	182	10	43.3	M10×1.5; 14.5 deep
	28	204	10	33.7	M10×1.5; 16 deep
	45	229	10.7	53.4	M10×1.5; 16 deep
	71	267	11.8	61.3	M10×1.5; 20 deep
	88	267	11.8	61.3	M10×1.5; 20 deep
	100	338	10.5	65	M10×1.5; 16 deep
	140	350	10.8	77.3	M10×1.5; 16 deep

K52 (SAE J744 19-4 (A-B))	**NG**	**A1**	**A2**	**A3**	**A4**[2]
	18	182	18.8	38.7	M10×1.5; 14.5 deep
	28	204	18.8	38.7	M10×1.5; 16 deep
	45	229	18.9	38.7	M10×1.5; 16 deep
	71	267	21.3	41.4	M10×1.5; 20 deep
	88	267	21.3	41.4	M10×1.5; 20 deep
	100	338	19	38.9	M10×1.5; 16 deep
	140	350	18.9	38.6	M10×1.5; 16 deep

1) According to ANSI B92.1a, 30° pressure angle, flat root, side fit, tolerance class 5
2) Thread according to DIN 13, see instruction manual for maximum tightening torques.

Flange ISO 3019-1 (SAE)		Hub for splined shaft[1]		Availability over sizes							Code
Diameter	**Symbol**	**Diameter**		**18**	**28**	**45**	**71**	**88**	**100**	**140**	
101-2 (A)		7/8 in	13T 16/32DP	–	●	●	●	●	●	●	K68
		1 in	15T 16/32DP	–	–	●	●	●	●	●	K04

● = Available – = Not available

▼ **101-2**

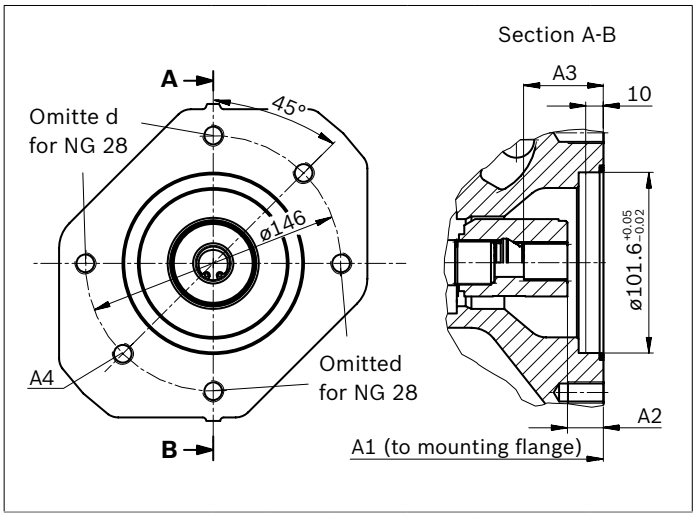

K68 (SAE J744 22-4 (B))	NG	A1	A2	A3	A4[2]
	28	204	17.8	41.7	M12×1.75[3]
	45	229	17.9	41.7	M12×1.75; 18 deep
	71	267	20.3	44.7	M12×1.75; 20 deep
	88	267	20.3	44.7	M12×1.75; 20 deep
	100	338	18	41.9	M12×1.75; 20 deep
	140	350	17.8	41.6	M12×1.75; 20 deep

▼ **101-2**

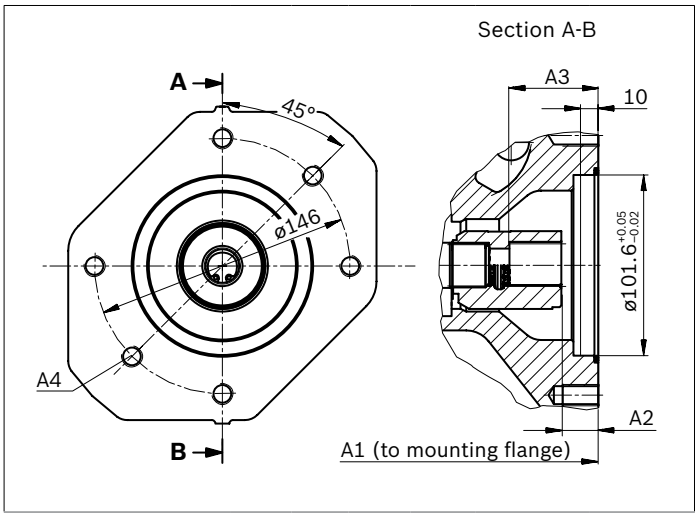

K04 (SAE J744 25-4 (B-B))	NG	A1	A2	A3	A4[2]
	45	229	18.4	46.7	M12×1.75; 18 deep
	71	267	20.8	49.1	M12×1.75; 20 deep
	88	267	20.8	49.1	M12×1.75; 20 deep
	100	338	18.2	46.6	M12×1.75; 20 deep
	140	350	18.3	45.9	M12×1.75; 20 deep

1) According to ANSI B92.1a, 30° pressure angle, flat root, side fit, tolerance class 5
2) Thread according to DIN 13, see instruction manual for maximum tightening torques.
3) Continuous

Flange ISO 3019-1 (SAE)		Hub for splined shaft[1]		Availability over sizes							Code
Diameter	**Symbol**	**Diameter**		**18**	**28**	**45**	**71**	**88**	**100**	**140**	
127-2 (C)	⚬⚬, ⚬⚬	1 1/4 in	14T 12/24DP	–	–	–	●	●	●	●	K07
		1 1/2 in	17T 12/24DP	–	–	–	–	–	●	●	K24

● = Available – = Not available

▼ **127-2**

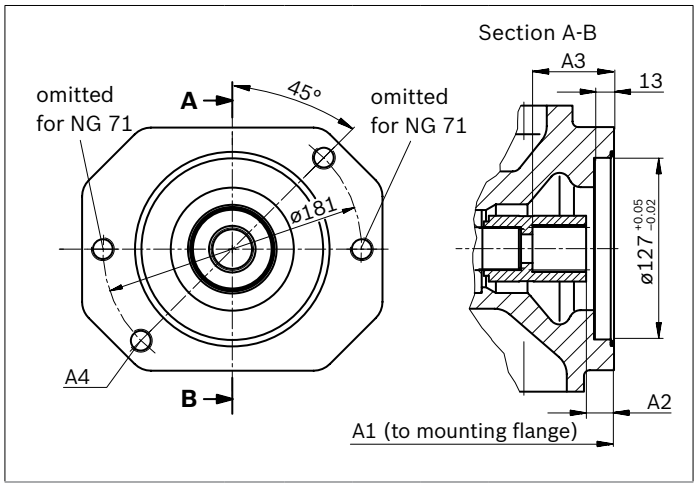

K07 (SAE J744 32-4 (C))	NG	A1	A2	A3	A4[2]
	71	267	21.8	58.6	M16×2[3]
	88	267	21.8	58.6	M16×2[3]
	100	338	19.5	56.4	M16×2[3]
	140	350	19.3	56.1	M16×2; 24 deep

▼ **127-2**

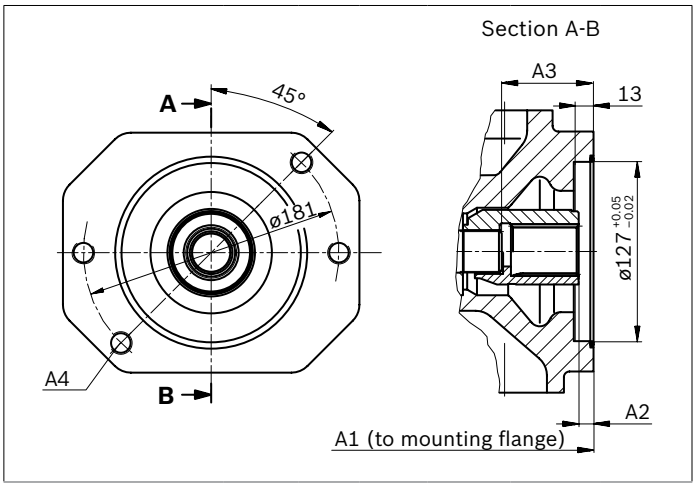

K24 (SAE J744 38-4 (C-C))	NG	A1	A2	A3	A4[2]
	100	338	10.5	65	M16×2[3]
	140	350	7.9	73.3	M16×2; 32 deep

1) According to ANSI B92.1a, 30° pressure angle, flat root, side fit, tolerance class 5
2) Thread according to DIN 13, see instruction manual for maximum tightening torques.
3) Continuous

Flange ISO 3019-1 (SAE)		Hub for splined shaft[1]	Availability over sizes							Code
Diameter	**Symbol**	**Diameter**	**18**	**28**	**45**	**71**	**88**	**100**	**140**	
152-4 (A)	⌘	1 3/4 in 13T 8/16DP	–	–	–	–	–	–	●	K17
63-4	⌘	Metric keyed shaft Ø25	–	●	●	●	●	●	●	K57

● = Available – = Not available

▼ **152-4**

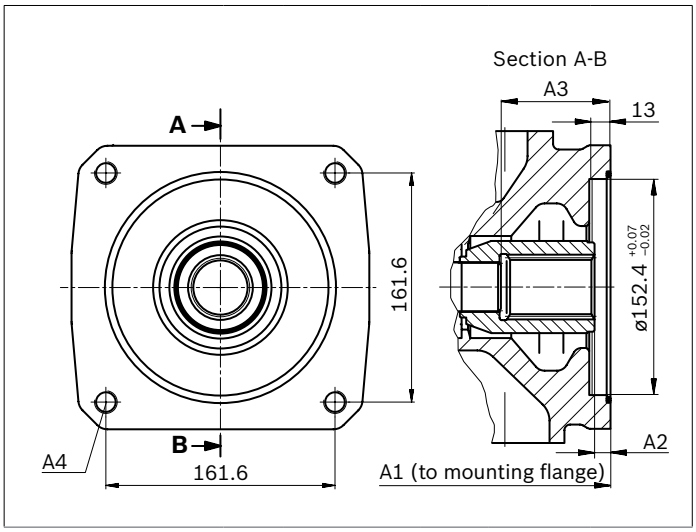

K17 (SAE J744 44-4 (D))	NG	A1	A2	A3	A4[2]
	140	350	11	77.3	M16×2;[3]

▼ **63-4** metric[4]

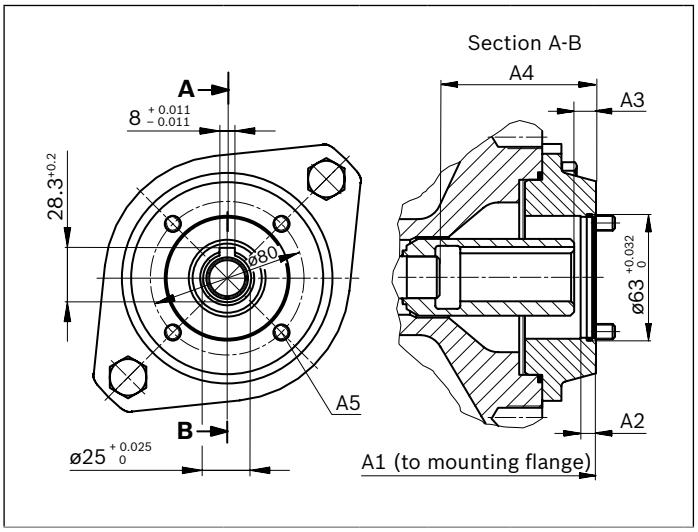

K57 (4-hole flange)	NG	A1	A2	A3	A4	A5[5]
	28	232	8	10.6	58.4	M8
	45	257	8	11	81	M8
	71	283	8	12.5	77	M10
	88	283	8	12.5	77	M10
	100	354	8	10.5	81	M10
	140	366	8	11	93	M8

1) According to ANSI B92.1a, 30° pressure angle, flat root, side fit, tolerance class 5
2) Thread according to DIN 13, see instruction manual for maximum tightening torques.
3) Continuous
4) For mounting an R4 radial piston pump (see data sheet 11263)
5) Screws for mounting the radial piston motor are included in the scope of delivery

Flange ISO 3019-2		Hub for splined shaft[1]		Availability over sizes							Code
Diameter	**Symbol**	**Diameter**		**18**	**28**	**45**	**71**	**88**	**100**	**140**	
80, 2-hole	⚲, ⚲, ⚲	3/4 in	11T 16/32DP	●	●	●	●	●	●	●	KB2
100, 2-hole	⚲	7/8 in	13T 16/32DP	–	●	●	●	●	●	●	KB3
		1 in	15T 16/32DP	–	–	●	●	●	●	●	KB4

● = Available – = Not available

▼ **80, 2-hole**

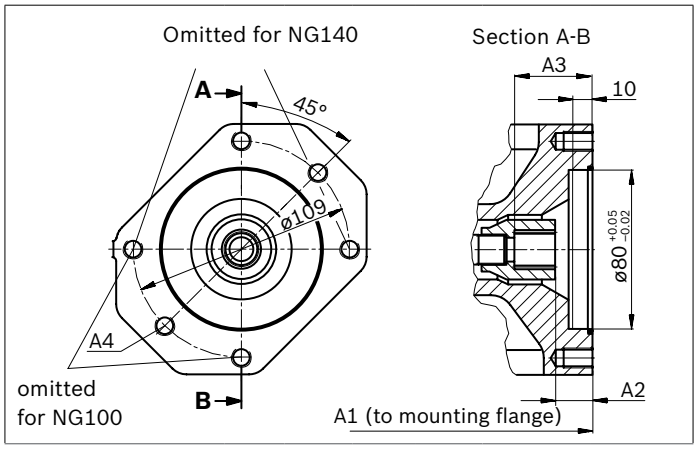

KB2 (SAE J744 19-4 (A-B))	NG	A1	A2	A3	A4[2]
	18	182	18.8	38.7	M10×1.5; 14.5 deep
	28	204	18.8	38.7	M10×1.5; 16 deep
	45	229	18.9	38.7	M10×1.5; 16 deep
	71	267	21.3	41.4	M10×1.5; 20 deep
	88	267	21.3	41.4	M10×1.5; 20 deep
	100	338	19	38.9	M10×1.5; 20 deep
	140	350	18.9	38.6	M10×1.5; 20 deep

▼ **100, 2-hole**

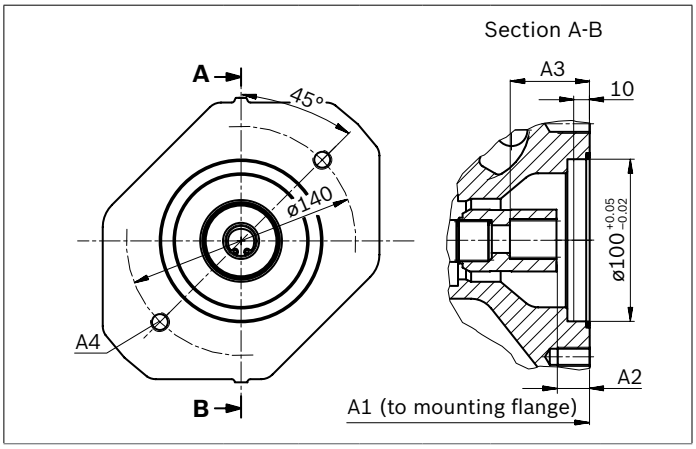

KB3 (SAE J744 22-4 (B))	NG	A1	A2	A3	A4[2]
	28	204	17.8	41.7	M12×1.5[3]
	45	229	17.9	41.7	M12×1.5[3]
	71	267	20.3	44.1	M12×1.5; 20 deep
	88	267	20.3	44.1	M12×1.5; 20 deep
	100	338	18	41.9	M12×1.5; 20 deep
	140	350	17.8	41.6	M12×1.5; 20 deep

▼ **100, 2-hole**

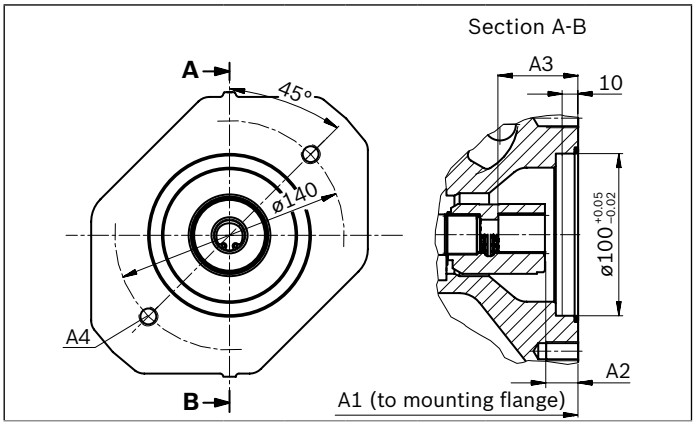

KB4 (SAE J744 25-4 (B-B))	NG	A1	A2	A3	A4[2]
	45	229	18.4	46.7	M12×1.75[3]
	71	267	20.8	49.1	M12×1.75; 20 deep
	88	267	20.8	49.1	M12×1.75; 20 deep
	100	338	18.2	46.6	M12×1.75; 20 deep
	140	350	18.3	45.9	M12×1.75; 20 deep

1) According to ANSI B92.1a, 30° pressure angle, flat root, side fit, tolerance class 5
2) Thread according to DIN 13, see instruction manual for maximum tightening torques.
3) Continuous

Flange ISO 3019-2		Hub for splined shaft[1]		Availability over sizes							Code
Diameter	**Symbol**	**Diameter**		**18**	**28**	**45**	**71**	**88**	**100**	**140**	
125, 2-hole	⚬⚬, ⚬⚬	1 1/4 in	14T 12/24DP	–	–	–	●	●	●	●	KB5
		1 1/2 in	17T 12/24DP	–	–	–	–	–	●	●	KB6
180, 2-hole	⚬⚬	1 3/4 in	13T 8/32DP	–	–	–	–	–	–	●	KB7

● = Available – = Not available

▼ **125, 2-hole**

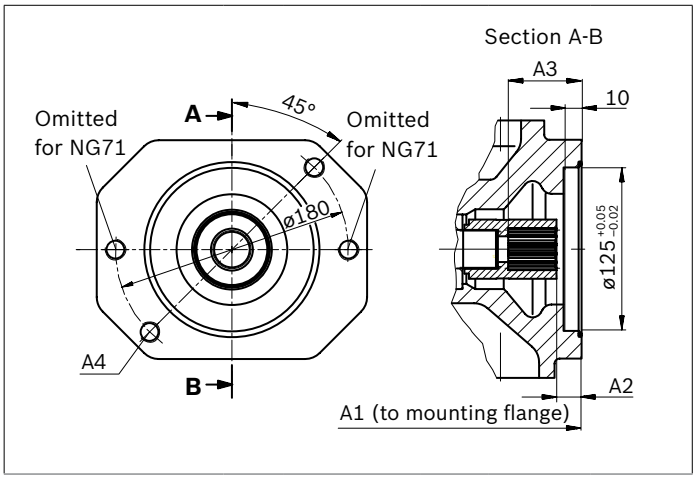

KB5 (SAE J744 32-4 (C))	NG	A1	A2	A3	A4[2]
	71	267	21.8	58.6	M16×2[3]
	88	267	21.8	58.6	M16×2[3]
	100	338	19.5	56.4	M16×2[3]
	140	350	19.3	56.1	M16×2; 24 deep

▼ **125, 2-hole**

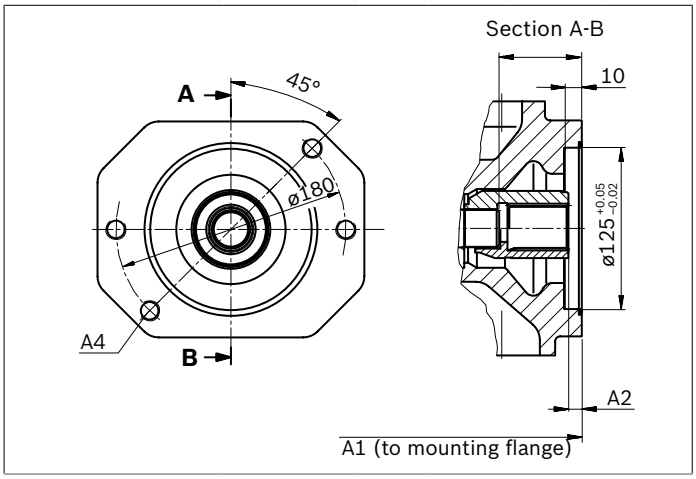

KB6 (SAE J744 38-4 (C-C))	NG	A1	A2	A3	A4[2]
	100	338	10.5	65	M16×2[3]
	140	350	10.1	77.3	M16×2; 32 deep

▼ **180, 4-hole**

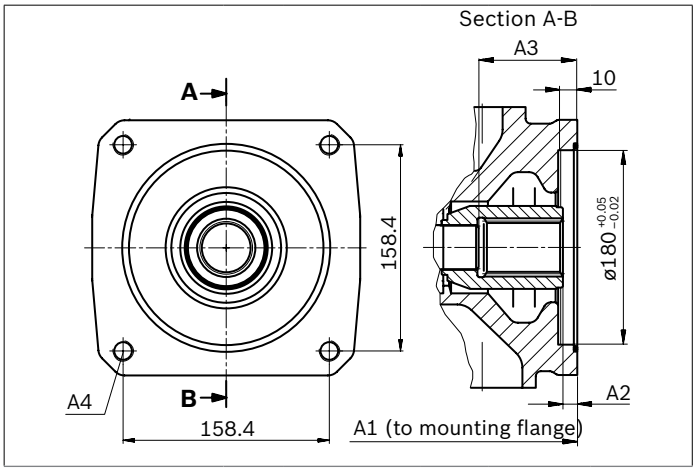

KB7 (SAE J744 44-4 (D))	NG	A1	A2	A3	A4[2]
	140	350	11.3	77.3	M16×2[3]

1) According to ANSI B92.1a, 30° pressure angle, flat root, side fit, tolerance class 5
2) Thread according to DIN 13, see instruction manual for maximum tightening torques.
3) Continuous

Overview of mounting options

SAE – mounting flange

Through drive			Mounting options – 2nd pump			
Flange ISO 3019-1	**Hub for splined shaft**	**Code**	**A10VSO/31 NG (shaft)**	**A10V(S)O/5x NG (shaft)**	**Gear pump Design (NG)**	**Through drive available for size**
82-2 (A)	5/8 in	K01	18 (U)	10 (U) 18 (U)	AZPF	18 to 140
	3/4 in	K52	18 (S, R)	10 (S) 18 (S, R)	–	18 to 140
101-2 (B)	7/8 in	K68	28 (S, R) 45 (U, W)[1]	28 (S, R) 45 (U, W)[1]	AZPN/G	28 to 140
	1 in	K04	45 (S, R) –	45 (S, R) 60, 63, 72 (U, W)[2]	PGH4	45 to 140
127-2 (C)	1 1/4 in	K07	71 (S, R) 88 (S, R) 100 (U, W)[3]	85 (U, W)[3] 100 (U,W)	–	71 to 140
	1 1/2 in	K24	100 (S)	85 (S) 100 (S)	PGH5	100 to 140
152-4 (4-hole D)	1 3/4 in	K17	140 (S)	–	–	140

ISO – mounting flange

Through drive			Mounting options – 2nd pump			
Flange ISO 3019-2	**Hub for splined shaft**	**Code**	**A10VSO/31 NG (shaft)**	**A10V(S)O/5x NG (shaft)**	**External gear pump design (size)**	**Through drive available for size**
80, 2-hole	3/4 in	KB2	18 (S, R)	10 (S)	–	18 to 140
100, 2-hole	7/8 in	KB3	28 (S, R)	–	–	28 to 140
	1 in	KB4	45 (S, R)	–	–	45 to 140
125, 2-hole	1 1/4 in	KB5	71 (S, R) 88 (S, R)	–	–	71 to 140
	1 1/2 in	KB6	100 (S)	–	–	100 to 140
180, 4-hole	1 3/4 in	KB7	140 (S)	–	–	140

ISO – mounting flange for keyed shaft

Through drive			Mounting options – 2nd pump		
Flange ISO 3019-2	**Hub for keyed shaft**	**Code**		**Radial piston pump**	**Through drive available for size**
63-4 metric	3/4 in	K57		R4	28 to 140

1) Not for main pump NG28 with K68
2) Not for main pump NG45 with K04
3) Not for main pump NG71 and NG88 with K07

Combination pumps A10VSO + A10VSO

By using combination pumps, it is possible to have independent circuits without the need for splitter gearboxes. When ordering combination pumps, the type designations of the 1st and 2nd pumps must be linked by a "**+**".

Order example:

A10VSO100DFR1/31R-VSA12K04+
A10VSO45DFR/31R-VSA12N00

If no further pumps are to be mounted at the factory, the simple type designation is sufficient.

It is permissible to use a combination of two single pumps of the same nominal size (tandem pump) considering a dynamic mass acceleration of maximum 10 g (= 98.1 m/s²) without additional support brackets.

Each through drive is plugged with a **non-pressure-resistant** cover. Before commissioning the units, they must therefore be equipped with a pressure-resistant cover. Through drives can also be ordered with pressure-resistant covers. Please specify in plain text.

For combination pumps consisting of more than two pumps, the mounting flange must be rated for the permissible mass torque (please contact us).

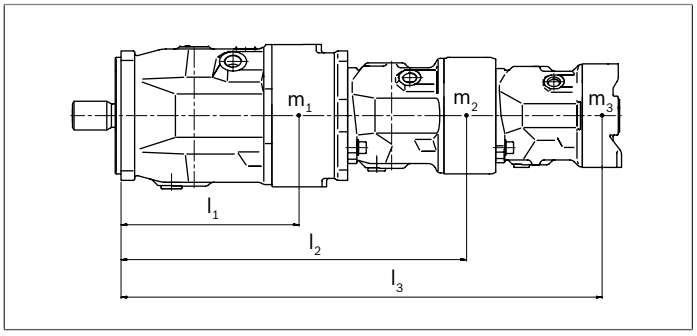

m_1, m_2, m_3	Weight of pump	[kg]
l_1, l_2, l_3	Distance from center of gravity	[mm]
$T_m = (m_1 \times l_1 + m_2 \times l_2 + m_3 \times l_3) \times \frac{1}{102}$		[Nm]

Permissible mass moment of inertia

Size			18	28	45	71	88	100	140	
static	T_m	Nm	500	880	1370	2160	2160	3000	4500[1)]	3000[2)]
dynamic at 10 g (98.1 m/s²)	T_m	Nm	50	88	137	216	216	300	450[1)]	300[2)]
Weight without through drive (N00)	m	kg	12.9	18	23.5	35.2	35.2	49.5	65.4	
Weight with through drive (K..)			13.8	19.3	25.1	38	38	55.4	74.4	
Distance, center of gravity **without** through drive (N00)	l_1	mm	92	100	113	127	127	161	159	
Distance, center of gravity **with** through drive (K..)	l_1	mm	98	107	120	137	137	178	180	

1) 4-hole flange (D)
2) 2-hole flange (C)

Connector for solenoids

HIRSCHMANN DIN EN 175 301-803-A /ISO 4400
without bidirectional suppressor diode **H**
There is the following type of protection with the installed mating connector:

- IP65 (DIN/EN 60529)

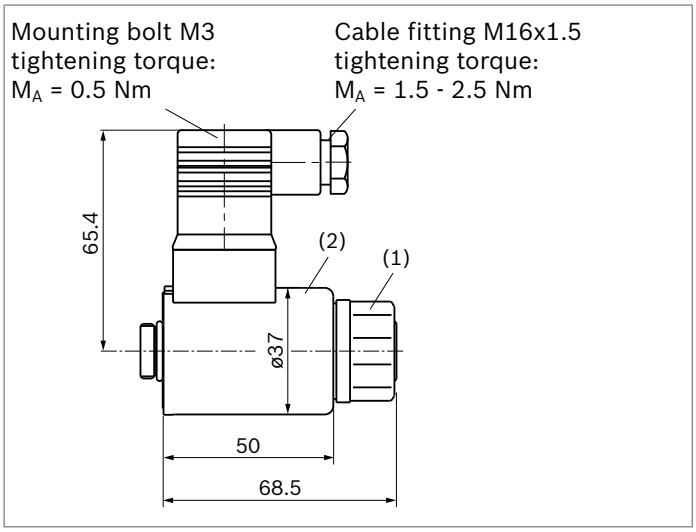

The seal ring in the cable fitting is suitable for lines of diameter 4.5 mm to 10 mm.
The mating connector is not included in the scope of delivery. This can be supplied by Bosch Rexroth on request.

Electronic controls

Control	Electronics		Further information
Electric amplifier	VT 2000[1)]	analog	29904
Electrical amplifier modules	VT 11029 VT 11030[1)]	analog	29741
Valve amplifiers for proportional pressure valves	VT-VSPA1-1[1)] VT-VSPA1K-1[1)]	analog	30111

Bosch Rexroth material number: R902602623
Device plug on the solenoid according to DIN 43650

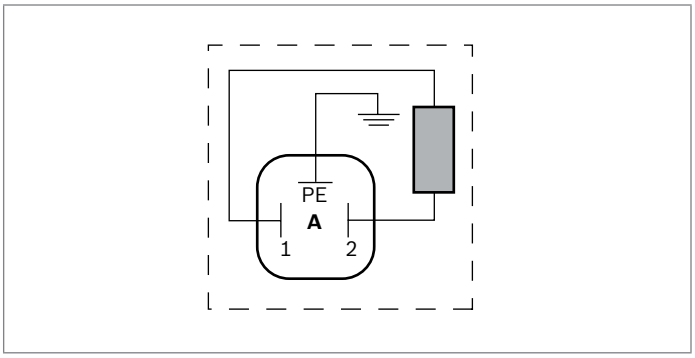

Notice

- If necessary, you can change the position of the connector by turning the solenoid.
- The procedure is defined in the instruction manual.

1) Only 24 V nominal voltage

Installation instructions

General

The axial piston unit must be filled with hydraulic fluid and air bled during commissioning and operation. This must also be observed following a longer standstill as the axial piston unit may empty via the hydraulic lines.
Particularly with the “drive shaft up/down” installation position, filling and air bleeding must be carried out completely as there is, for example, a danger of dry running.
The leakage in the housing area must be discharged to the reservoir via the highest available tank port (**L**, **L_1**).
For combination pumps, the leakage must be drained off at each pump.
If a shared drain line is used for several units, make sure that the respective case pressure is not exceeded. The shared drain line must be dimensioned to ensure that the maximum permissible case pressure of all connected units is not exceeded in any operational conditions, particularly at cold start. If this is not possible, separate drain lines must be installed if necessary.
To achieve favorable noise values, decouple all connecting lines using elastic elements and avoid above-reservoir installation.
In all operating conditions, the suction lines and the drain lines must flow into the reservoir below the minimum fluid level. The permissible suction height h_S results from the total pressure loss. However, it must not be higher than $h_{S\ max}$ = 800 mm. The minimum suction pressure at port **S** must also not fall below 0.8 bar absolute during operation and during cold start.
When designing the reservoir, ensure adequate distance between the suction line and the drain line. This prevents the heated, return flow from being drawn directly back into the suction line.

Key, see page 47.

Installation position

See the following examples **1** to **12**.
Further installation positions are available upon request.
Recommended installation position: **1** and **3**

Below-reservoir installation (standard)

Below-reservoir installation means that the axial piston unit is installed outside of the reservoir and below the minimum fluid level of the reservoir.

Installation position	Air bleed	Filling
1 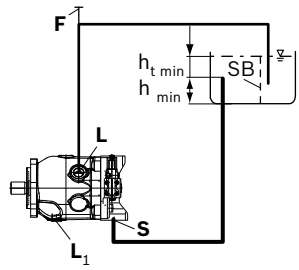	**L**	**L_1**
2[1] 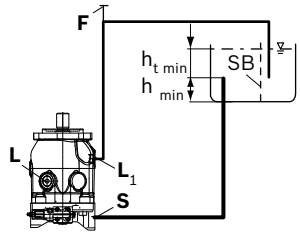	**L_1**	**L**
3 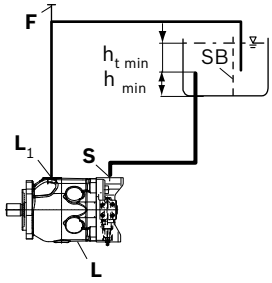	**L_1**	**L**
4[1] 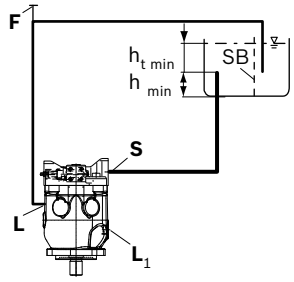	**L**	**L_1**

1) Because complete air bleeding and filling are not possible in this position, the pump should be air bled and filled in a horizontal position before installation.

Above-reservoir installation

Above-reservoir installation means that the axial piston unit is installed above the minimum fluid level of the reservoir. To prevent the axial piston unit from
draining in position 6, the height difference hES min must be at least 25 mm.Observe the maximum permissible suction height $h_{S\ max}$ = 800 mm
A check valve in the drain line is only permissible in individual cases. Consult us for approval..

Installation position	Air bleed	Filling
5 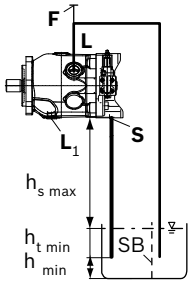	**L**	**L**
6[1)] 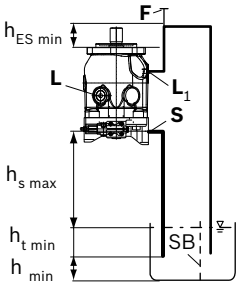	**L_1**	**L_1**
7 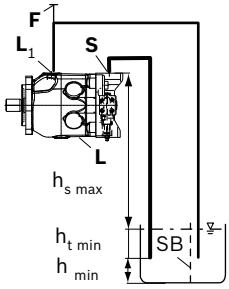	**L_1**	**L_1**
8[1)] 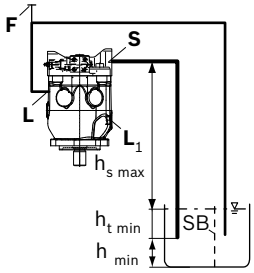	**L**	**L**

Key, see page 47.

Inside-reservoir installation

Inside-reservoir installation is when the axial piston unit is installed in the reservoir below the minimum fluid level. The axial piston unit is completely below the hydraulic fluid. If the minimum fluid level is equal to or below the upper edge of the pump, see chapter “Above-reservoir installation”. Axial piston units with electrical components (e.g., electric control, sensors) may not be installed in a reservoir below the fluid level.

Installation position	Air bleed	Filling
9 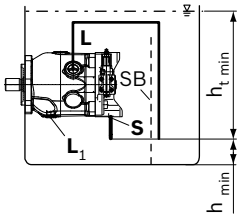	Via the highest available port **L**	Automatically via the open port **L** or **L_1** due to the position under the hydraulic fluid level
10[1)] 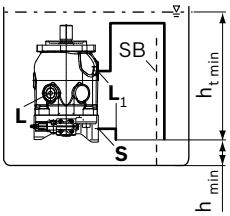	Via the highest available port **L_1**	Automatically via the open port **L**, **L_1** due to the position under the hydraulic fluid level
11 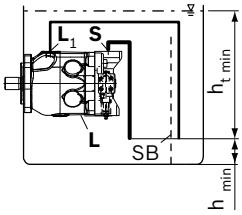	Via the highest available port **L_1**	Automatically via the open port **L** or **L_1** due to the position under the hydraulic fluid level
12[1)] 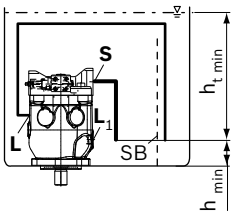	Via the highest available port **L**	Automatically via the open port **L** or **L_1** due to the position under the hydraulic fluid level

1) Because complete air bleeding and filling are not possible in this position, the pump should be air bled and filled in a horizontal position before installation.

Key	
F	Filling / air bleeding
S	Suction port
L; L_1	Drain port
SB	Baffle (baffle plate)
$h_{t\ min}$	Minimum required immersion depth (200 mm)
h_{min}	Minimum required distance to the reservoir bottom (100 mm)
$h_{ES\ min}$	Minimum necessary height required to protect the axial piston unit from draining (25 mm)
$h_{S\ max}$	Maximum permissible suction height (800 mm)

Notice

Port **F** is part of the external piping and must be provided on the customer side to make filling and air bleeding easier.

Project planning notes

- The A10VSO axial piston variable pump is designed to be used in open circuit.
- The project planning, installation and commissioning of the axial piston unit requires the involvement of qualified skilled personnel.
- Before using the axial piston unit, please read the corresponding instruction manual completely and thoroughly. If necessary, this can be requested from Bosch Rexroth.
- Before finalizing your design, please request a binding installation drawing.
- The specified data and notes contained herein must be observed.
- Depending on the operating conditions of the axial piston unit (working pressure, fluid temperature), the characteristic curve may shift.
- Preservation: Our axial piston units are supplied as standard with preservative protection for a maximum of 12 months. If longer preservative protection is required (maximum 24 months), please specify this in plain text when placing your order. The preservation periods apply under optimal storage conditions, details of which can be found in the data sheet 90312 or in the instruction manual.
- Not all versions of the product are approved for use in a safety function according to ISO 13849. Please consult the responsible contact person at Bosch Rexroth if you require reliability parameters (e.g. $MTTF_d$) for functional safety.
- Depending on the type of control used, electromagnetic effects can be produced when using solenoids. When a direct current is applied, solenoids do not cause electromagnetic interference nor is their operation impaired by electromagnetic interference.
  Other behavior can result when a modulated direct current (e.g. PWM signal) is applied. Potential electromagnetic interference for persons (e.g. persons with a pacemaker) and other components must be tested by the machine manufacturer.
- Pressure controllers are not protection against overpressure. A pressure relief valve is to be provided for the hydraulic system.
- Working ports:
  - The ports and fastening threads are designed for the specified maximum pressure. The machine or system manufacturer must ensure that the connecting elements and lines correspond to the specified application conditions (pressure, flow, hydraulic fluid, temperature) with the necessary safety factors.
  - The working ports and function ports are only intended to accommodate hydraulic lines.

Safety instructions

- During and shortly after operation, there is a risk of getting burnt on the axial piston unit and especially on the solenoids. Take the appropriate safety measures (e.g. by wearing protective clothing).
- Moving parts in control equipment (e.g. valve spools) can, under certain circumstances, get stuck in position as a result of contamination (e.g. impure hydraulic fluid, abrasion, or residual dirt from components). As a result, the hydraulic fluid flow and the build-up of torque in the axial piston unit can no longer respond correctly to the operator's specifications. Even the use of various filter elements (external or internal flow filtration) will not rule out a fault but merely reduce the risk. The machine/system manufacturer must test whether remedial measures are needed on the machine for the application concerned in order to bring the driven consumer into a safe position (e.g. safe stop) and ensure any measures are properly implemented.

Bosch Rexroth AG
Mobile Applications
An den Kelterwiesen 14
72160 Horb a.N., Germany
Tel. +49 7451 92-0
info.ma@boschrexroth.de
www.boschrexroth.com

© Bosch Rexroth AG 2016. All rights reserved, also regarding any disposal, exploitation, reproduction, editing, distribution, as well as in the event of applications for industrial property rights. The data specified within only serves to describe the product. No statements concerning a certain condition or suitability for a certain application can be derived from our information. The information given does not release the user from the obligation of own judgment and verification. It must be remembered that our products are subject to a natural process of wear and aging.